Contents

Aluform

Aluminium enclosure system for terminals, electronic components and membrane keypads Page 6 - 18

Aluminium Standard

Universal enclosure system for industrial applications
with electrical / electronic components Page 19 - 46

Aluminium Flange

Robust installation enclosure system with flange openings Page 47 - 51

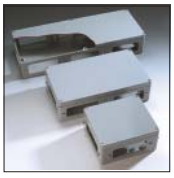

Polyester Standard

Polyester enclosure system for industrial applications
with electrical / mechanical components Page 52 - 71

Polyester CombiBox

Polyester enclosure system for industrial applications
with two level fitting possibilities Page 72 - 76

Polyester Flange

Installation enclosure system with flange openings Page 77 - 82

Polycarbonate / ABS

Installation and energy distribution enclosure system Page 83 - 100

Polycarbonate Flange

Light-weight installation enclosure system with flange-pre-embossing Page 101 - 107

ECO / PCI Compact enclosures

Low cost installation and distribution enclosure system Page 108 - 118

Technical changes reserved

«ЭйБиЭн»
Тел.\факс +375(17) 390-51-85 info@abn.by Тел. +375(44) 592-00-86
Тел.\факс +375(17) 390-51-86 www.abn.by

Contents

Polyglas / Polycase

Polyester enclosure with hinged door — Page 119 - 122

Mini-Polyglas

Small polyester enclosure with hinged lid — Page 123 - 125

Polyester / ABS cabinets

Cabinets in standard design or with window — Page 126 - 130

CS Box

Polyamide control enclosures and junction boxes — Page 131 - 134

Cable glands — Page 135 - 139

General technical information — Page 140 - 143

For more industrial enclosure systems made of stainless steel, please refer to the catalogue „Stainless Steel Enclosures“

«ЭйБиЭн»
Тел.\факс +375(17) 390-51-85 info@abn.by Тел. +375(44) 592-00-86
Тел.\факс +375(17) 390-51-86 www.abn.by

Applications

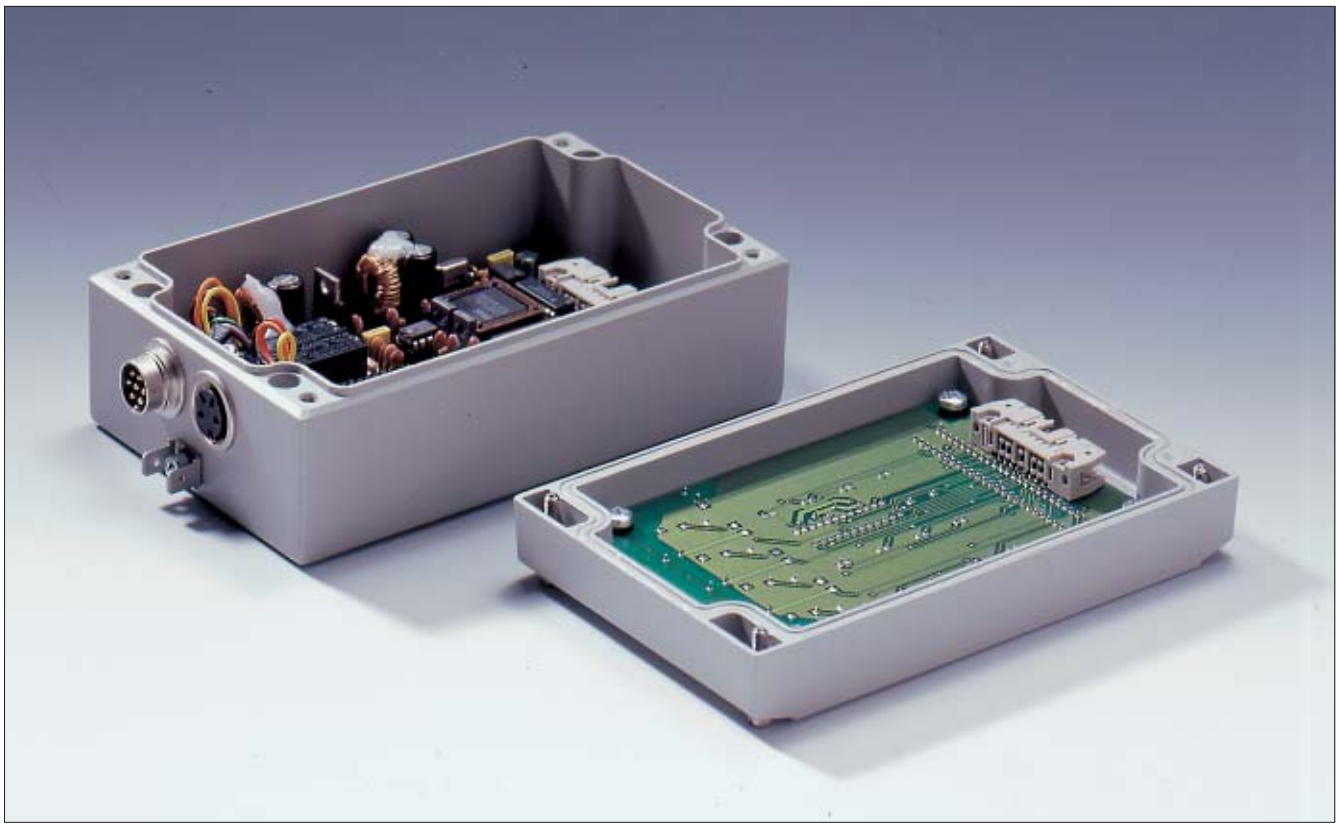

«ЭйБиЭн»
Тел.\факс +375(17) 390-51-85 info@abn.by Тел. +375(44) 592-00-86
Тел.\факс +375(17) 390-51-86 www.abn.by

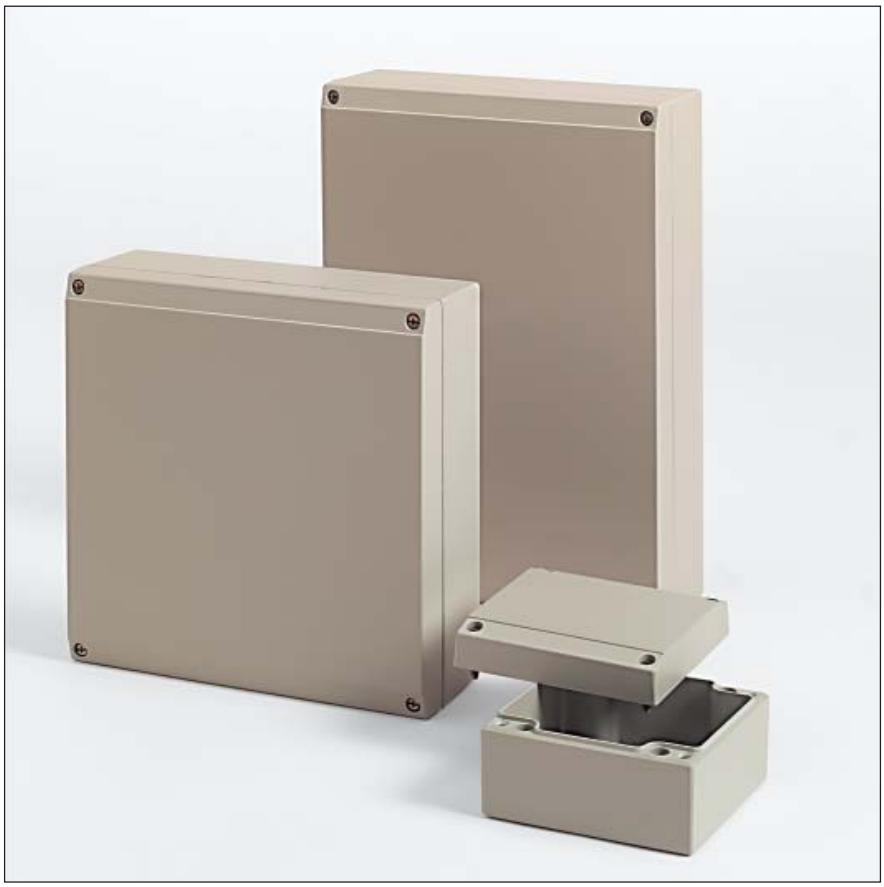

UL® / cUL®

- Aluminium diecast enclosure for MCR and automation engineering
- Prepared for acceptance for front membranes and keypads
- Rectangular dome sequence in cover and base

Technical Data

Material:

DIN EN 1706 EN AC-AlSi 12 (Fe)

Painting:

powder coating

Colour:

RAL 7038, agate grey

special colour on request

Ingress protection:

IP 66 to EN 60529

higher protection on request

Impact resistance:

7 Joule to EN 60079-0

Temperature range:

PU (polyurethane) seal (std.):	-40°C to +90°C
CR (chloroprene) seal:	-40°C to +100°C
VMQ (silicone) seal (optional):	-60°C to +130°C

Included in delivery

Aluminium diecast enclosure consisting of lid, seal incl. captive +/- stainless steel screws, base with 4 earthing screws

«ЭйБиЭн»
Тел.\факс +375(17) 390-51-85 info@abn.by Тел. +375(44) 592-00-86
Тел.\факс +375(17) 390-51-86 www.abn.by

Programme range

Order No.	W x L x H (mm)	Mounting plate	DIN rail TS 15	DIN rail TS 35	External mounting brackets (set = 2 pcs.)
04.08 08 08	80 x 80 x 81	***10.01 10 60***	***10.06 10 03***		***04.00 00 80***
04.08 12 08	80 x 120 x 81	***10.01 10 61***	***10.06 10 50***		***04.00 00 80***
04.10 10 06	100 x 100 x 61	***10.01 10 31***	***10.06 10 07***	***10.06 14 71***	***04.00 01 00***
04.10 16 06	100 x 160 x 61	***10.01 10 32***	***10.06 10 08***	***10.06 14 72***	***04.00 01 00***
04.10 20 06	100 x 200 x 61	***10.01 10 33***	***10.06 10 09***	***10.06 14 73***	***04.00 01 00***
04.12 12 08	120 x 120 x 81	***10.01 10 62***	***10.06 10 50***	***10.06 14 83***	***04.00 01 20***
04.12 16 08	120 x 160 x 81	***10.01 10 63***	***10.06 10 08***	***10.06 14 72***	***04.00 01 20***
04.14 14 07	140 x 140 x 71	***10.01 10 34***	***10.06 10 44***	***10.06 14 74***	***04.00 01 40***
04.14 18 07	140 x 180 x 71	***10.01 10 35***	***10.06 10 05***	***10.06 14 75***	***04.00 01 40***
04.14 22 07	140 x 220 x 72	***10.01 10 36***	***10.06 10 46***	***10.06 14 76***	***04.00 01 40***
04.16 16 08	160 x 160 x 81	***10.01 10 64***	***10.06 10 08***	***10.06 14 72***	***04.00 01 60***
04.16 24 08	160 x 240 x 81	***10.01 10 65***	***10.06 10 51***	***10.06 14 84***	***04.00 01 60***
04.20 20 07	200 x 200 x 72	***10.01 10 37***	***10.06 10 09***	***10.06 14 73***	***04.00 02 00***
04.20 28 07	200 x 280 x 72	***10.01 10 59***	***10.06 10 48***	***10.06 14 81***	***04.00 02 00***

Order No.	DIN rails for terminals TS 15	DIN rails for terminals TS 35	Mounting plate [1])	External mounting brackets pair	External aluminium hinges pair [3]), [4])	EMC screening	SWB/SBG/ SBGL Corrosion protection	Allen lid screws [2])	Silicone lid seal up to +130°C	Sealable lid screws in steel	Lid safety strip
04.08 08 08	•		•	•	•	•	•	•	•	•	•
04.08 12 08	•		•	•	•	•	•	•	•	•	•
04.10 10 06	•	•	•	•	•	•	•	•	•	•	•
04.10 16 06	•	•	•	•	•	•	•	•	•	•	•
04.10 20 06	•	•	•	•	•	•	•	•	•	•	•
04.12 12 08	•	•	•	•	•	•	•	•	•	•	•
04.12 16 08	•	•	•	•	•	•	•	•	•	•	•
04.14 14 07	•	•	•	•	•	•	•	•	•	•	•
04.14 18 07	•	•	•	•	•	•	•	•	•	•	•
04.14 22 07	•	•	•	•	•	•	•	•	•	•	•
04.16 16 08	•	•	•	•	•	•	•	•	•	•	•
04.16 24 08	•	•	•	•	•	•	•	•	•	•	•
04.20 20 07	•	•	•	•	•	•	•	•	•	•	•
04.20 28 07	•	•	•	•	•	•	•	•	•	•	•

[1]) Laminated paper [2]) Stainless steel [3]) Cast aluminium [4]) Please quote the installation side A-D when ordering

«ЭйБиЭн»
Тел.\факс +375(17) 390-51-85 info@abn.by Тел. +375(44) 592-00-86
Тел.\факс +375(17) 390-51-86 www.abn.by

Terminal mounting

	Phoenix															earth connection												
DIN rail TS 15	X	X	X																									
DIN rail TS 35				X	X	X	X	X	X	X																		
Voltage (V)	250	400	500	500	800	800	800	800	800	800																		
Current(A)	24	32	41	17,5	24	32	41	57	76	101																		
Nom. cross section (mm²)	2,5	3	5	1,5	2,5	2,5	4	6	10	16																		
Terminal width (mm)	5,2	5,2	6,2	4,2	5,2	5,2	6,2	8,2	10,2	12,2																		
Terminal type Type	MBK 2,5 E	MBK 3 / E-Z	MBK 5 / E-Z	UK 1,5 N	UK 2,5 N	UK 3 N	UK 5 N	UK 6 N	UK 10 N	UK 16 N						MSLKG 5 insulated, green/yellow	USLKG 1,5 N insulated, green/yellow	USLKG 2,5 N insulated, green/yellow	USLKG 6 N insulated, green/yellow	USLKG 10 N insulated, green/yellow	USKLG 16 N insulated, green/yellow	USLKG 3 insulated, green/yellow	USLKG 5 insulated, green/yellow						
04.08 08 08	7	7	5	6	5	5	4	3	2	2																		
04.08 12 08	14	14	12	16	13	13	11	8	6	5																		
04.10 10 06	11	11	9	11																								
04.10 16 06	22	22	18	25																								
04.10 20 06	30	30	25	35																								
04.12 12 08	14	14	12	16	13	13	11	8	6	5																		
04.12 16 08	22	22	18	25	20	20	17	13	10	8									as required									
04.14 14 07	18	18	15	21	17	17	14	10	8																			
04.14 18 07	26	26	22	30	24	24	20	15	12																			
04.14 22 07	34	34	28	40	32	32	27	20	16																			
04.16 16 08	34	34	18	25	20	20	17	13	10	8																		
04.16 24 08	37	37	31	45	36	36	30	23	18	15																		
04.20 20 07	30	30	25	35	28	28	23	18	14																			
04.20 28 07	45	45	38	54	44	44	36	27	22																			

	Weidmüller																		Earth connection								
DIN rail TS 15	X	X	X	X																							
DIN rail TS 35					X	X	X	X	X																		
Voltage (V)	250	250	400	400	600	500	800	800	1000																		
Current (A)	17,5	24	32	17,5	24	24	32	41	57																		
Nom. cross section (mm²)	1,5	2,5	4	1,5	2,5	2,5	4	6	10																		
Terminal width (mm)	5,1	5,1	6,1	3,5	5,1	5,1	6,1	8	10																		
Terminal type Type	AKZ 1,5	AKZ 2,5	AKZ 4	WDU 1,5 / R 3,5	WDU 2,5	WDU 2,5 N	WDU 4	WDU 6	WDU 10										WPE 2,5 green/yellow	WPE 4 green/yellow	WPE 6 green/yellow	WPE 10 green/yellow					
04.08 08 08	5	5	4	8	6	6	5	4	3																		
04.08 12 08	13	13	11	19	14	14	11	9	7																		
04.10 10 06	9	9	7	13		10																					
04.10 16 06	20	20	17	31		21																					
04.10 20 06	28	28	24	42		29																					
04.12 12 08	13	13	11	19	14	14	11	9	7																		
04.12 16 08	20	20	17	31	21	21	18	14	11																		
04.14 14 07	16	16	14	25	18	18	15	11																			
04.14 18 07	24	24	20	36	25	25	21	16																			
04.14 22 07	32	32	27	48	33	33	28	21																			
04.16 16 08	20	20	17	31	21	21	18	14	11																		
04.16 24 08	36	36	30	53	37	37	31	24	19																		
04.20 20 07	28	28	24	42	29	29	24	19																			
04.20 28 07	43	43	37	65	45	45	38	29																			

«ЭйБиЭн»
Тел.\факс +375(17) 390-51-85 info@abn.by Тел. +375(44) 592-00-86
Тел.\факс +375(17) 390-51-86 www.abn.by

Accessories

External mounting brackets (set = 2 pcs.)
for mounting without opening the lid

Order No.	A	B	for Type	Order No.	A	B	for Type
04.00 00 80	65	92	04.08 08 08	***04.00 01 40***	125	152	04.14 14 07
04.00 00 80	65	132	04.08 12 08	***04.00 01 40***	125	192	04.14 18 07
04.00 01 00	85	112	04.10 10 06	***04.00 01 40***	125	232	04.14 22 07
04.00 01 00	85	172	04.10 16 06	***04.00 01 60***	145	172	04.16 16 08
04.00 01 00	85	212	04.10 20 06	***04.00 01 60***	145	252	04.16 24 08
04.00 01 20	105	132	04.12 12 08	***04.00 02 00***	185	212	04.20 20 07
04.00 01 20	105	172	04.12 16 08	***04.00 02 00***	185	292	04.20 28 07

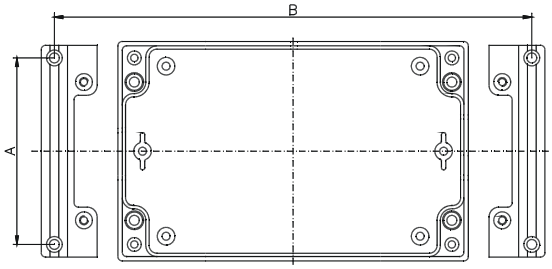

Panel holder
to convert the Aluform enclosure into a multi-functional control terminal
wall or table mounting
sheet steel material; powder coated, RAL 7030, stone grey

Order No.	width	for type
04.30 00 09	98 mm	04.10 10 06
		04.10 16 06
		04.10 20 06
04.30 00 14	138 mm	04.14 14 07
		04.14 18 07
		04.14 22 07

External hinge (set = 2 pcs)

Order No. ***04.00 00 10***

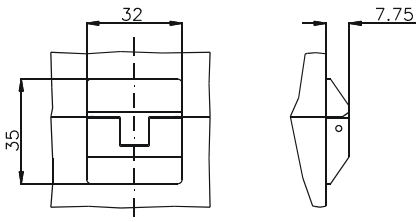

«ЭйБиЭн»
Тел.\факс +375(17) 390-51-85 info@abn.by Тел. +375(44) 592-00-86
Тел.\факс +375(17) 390-51-86 www.abn.by

Accessories

Lid safety strip
set = 2 pcs.
Note: for fastening base has to be manufactured

Order No. ***04.00 00 20***

«ЭйБиЭн»
Тел.\факс +375(17) 390-51-85 info@abn.by Тел. +375(44) 592-00-86
Тел.\факс +375(17) 390-51-86 www.abn.by

Type: **04.08 08 08** External dimensions: **80 x 80 x 81 mm** Weight: **700 g**

DIN rail length in mm	max. fitting length in mm	Mounting plate (thickness in mm)	External mounting brackets	External hinge* set	EMC version	SWB / SBG / SBGL corrosion protection	Allen lid screws	Silicone lid seal	Sealable lid screws in steel	Lid safety strip
TS 15										
63	50	2	•	•	•	•	•	•	•	•

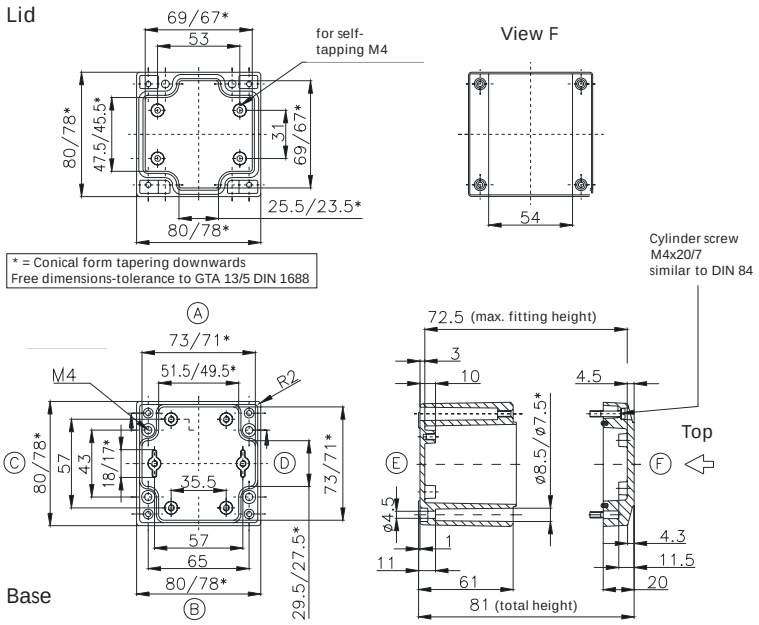

Maximum number of cable glands to ***DIN 50262****

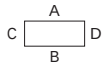

M	Corner dim.	Side A/B	Side C/D	PG	Corner dim.	Side A/B	Side C/D
12	17.25	8	3	7	17.25	8	3
16	25.30	4	2	9	21.85	5	2
20	27.60	3	1	11	25.30	4	2
25	37.95	1	1	13.5	27.60	3	1
32	48.30	1		16	31.05	2	1
40	60.95			21	37.95	1	
50	69.00			29	48.30	1	
63	74.75			36	60.95		
				42	69.00		
				48	74.75		

Type: **04.08 12 08** External dimensions: **80 x 120 x 81 mm** Weight: **650 g**

DIN rail length in mm	max. fitting length in mm	Mounting plate (thickness in mm)	External mounting brackets	External hinge* set	EMC version	SWB / SBG / SBGL corrosion protection	Allen lid screws	Silicone lid seal	Sealable lid screws in steel	Lid safety strip
TS 15										
107	90	2	•	•	•	•	•	•	•	•

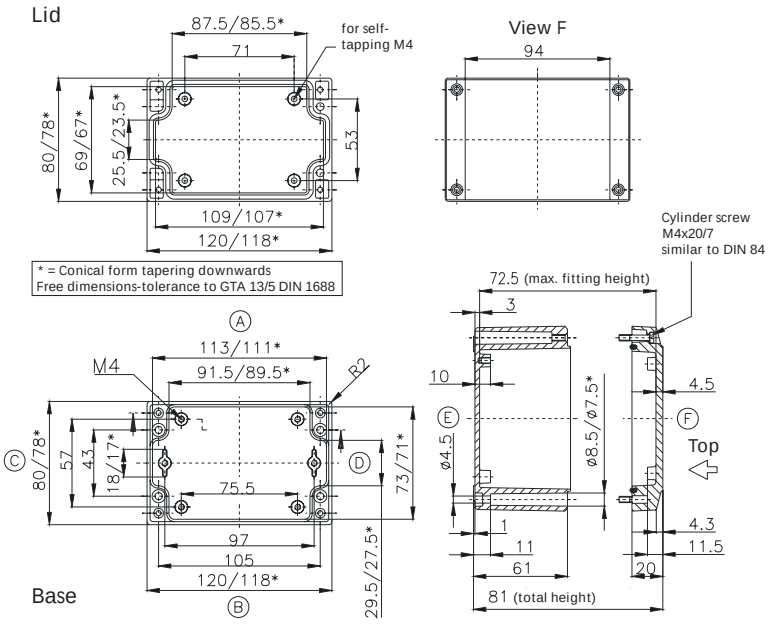

Maximum number of cable glands to ***DIN 50262****

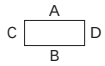

M	Corner dim.	Side A/B	Side C/D	PG	Corner dim.	Side A/B	Side C/D
12	17.25	15	3	7	17.25	15	3
16	25.30	6	2	9	21.85	8	2
20	27.60	5	1	11	25.30	6	2
25	37.95	2	1	13.5	27.60	5	1
32	48.30	2		16	31.05	3	1
40	60.95			21	37.95	2	
50	69.00			29	48.30	2	
63	74.75			36	60.95		
				42	69.00		
				48	74.75		

* Please quote mounting side

«ЭйБиЭн»
Тел.\факс +375(17) 390-51-85 info@abn.by Тел. +375(44) 592-00-86
Тел.\факс +375(17) 390-51-86 www.abn.by

Type: **04.10 10 06** External dimensions: ***100 x 100 x 61 mm*** Weight: ***650 g***

DIN rail length in mm	max. fitting length in mm	Mounting plate (thickness in mm)	External mounting brackets	External hinge* set	EMC version	SWB / SBG / SBGL corrosion protection	Allen lid screws	Silicone lid seal	Sealable lid screws in steel	Lid safety strip
TS 15/TS 35										
87.5	70	2	•	•	•	•	•	•	•	•

Maximum number of cable glands to ***DIN 50262****

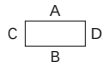

M	Corner dim.	Side A/B	Side C/D	PG	Corner dim.	Side A/B	Side C/D
12	17.25	6	4	7	17.25	5	4
16	25.30	3	2	9	21.85	3	2
20	27.60	2	2	11	25.30	3	2
25	37.95			13,5	27.60	2	2
32	48.30			16	31.05	2	1
40	60.95			21	37.95		
50	69.00			29	48.30		
63	74.75			36	60.95		
				42	69,00		
				48	74.75		

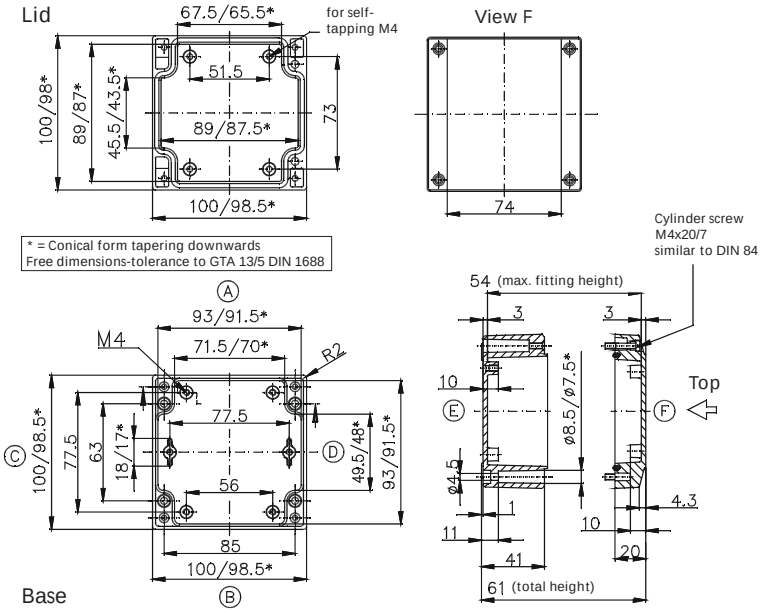

Type: **04.10 16 06** External dimensions: ***100 x 160 x 61 mm*** Weight: ***820 g***

DIN rail length in mm	max. fitting length in mm	Mounting plate (thickness in mm)	External mounting brackets	External hinge* set	EMC version	SWB / SBG / SBGL corrosion protection	Allen lid screws	Silicone lid seal	Sealable lid screws in steel	Lid safety strip
TS 15/TS 35										
148	130	2	•	•	•	•	•	•	•	•

Maximum number of cable glands to ***DIN 50262****

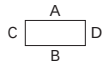

M	Corner dim.	Side A/B	Side C/D	PG	Corner dim.	Side A/B	Side C/D
12	17.25	11	4	7	17.25	11	4
16	25.30	5	2	9	21.85	6	2
20	27.60	4	2	11	25.30	5	2
25	37.95			13,5	27.60	4	2
32	48.30			16	31.05	4	1
40	60.95			21	37.95		
50	69.00			29	48.30		
63	74.75			36	60.95		
				42	69.00		
				48	74.75		

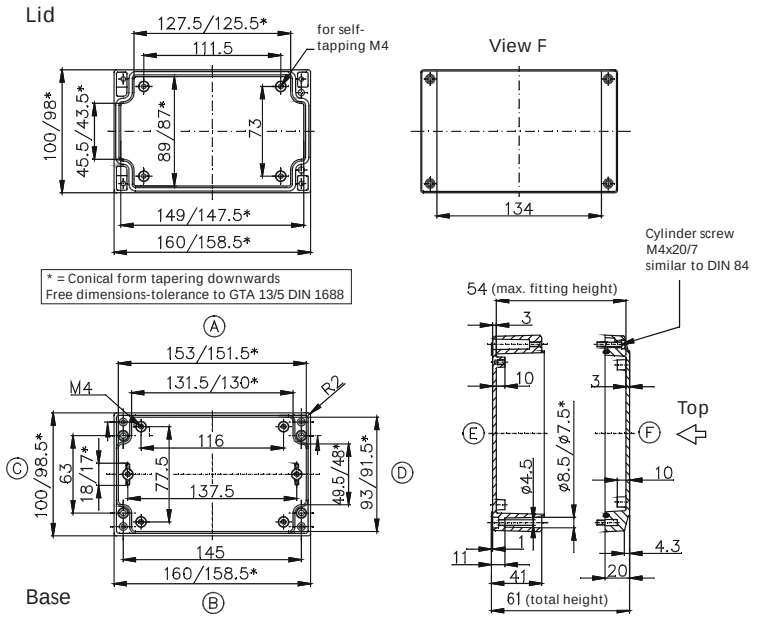

* Please quote mounting side

Type: **04.10 20 06** External dimensions: **100 x 200 x 61 mm** Weight: **840 g**

DIN rail length in mm	max. fitting length in mm	Mounting plate (thickness in mm)	External mounting brackets	External hinge* set	EMC version	SWB / SBG / SBGL corrosion protection	Allen lid screws	Silicone lid seal	Sealable lid screws in steel	Lid safety strip
TS 15/TS 35										
188	170	2	•	•	•	•	•	•	•	•

Maximum number of cable glands to ***DIN 50262****

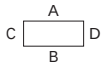

M	Corner dim.	Side A/B	Side C/D	PG	Corner dim.	Side A/B	Side C/D
12	17.25	15	4	7	17.25	14	4
16	25.30	7	2	9	21.85	8	2
20	27.60	6	2	11	25.30	7	2
25	37.95			13,5	27.60	6	2
32	48.30			16	31.05	5	1
40	60.95			21	37.95		
50	69.00			29	48.30		
63	74.75			36	60.95		
				42	69.00		
				48	74.75		

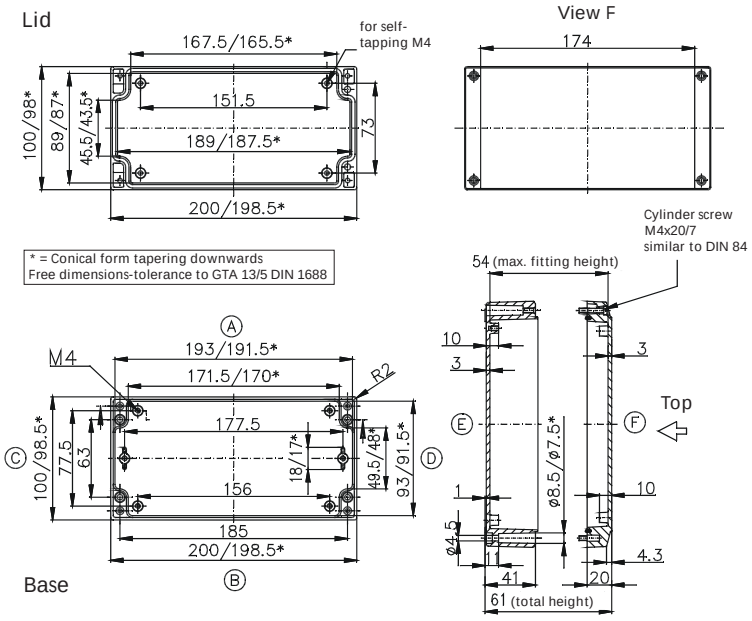

Type: **04.12 12 08** External dimensions: **120 x 120 x 81 mm** Weight: **880 g**

DIN rail length in mm	max. fitting length in mm	Mounting plate (thickness in mm)	External mounting brackets	External hinge* set	EMC version	SWB / SBG / SBGL corrosion protection	Allen lid screws	Silicone lid seal	Sealable lid screws in steel	Lid safety strip
TS 15/TS 35										
107	90	2	•	•	•	•	•	•	•	•

Maximum number of cable glands to ***DIN 50262****

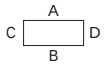

M	Corner dim.	Side A/B	Side C/D	PG	Corner dim.	Side A/B	Side C/D
12	17.25	15	11	7	17.25	15	11
16	25.30	6	6	9	21.85	8	6
20	27.60	5	4	11	25.30	6	5
25	37.95	2	2	13,5	27.60	5	4
32	48.30	2	1	16	31.05	3	2
40	60.95			21	37.95	2	2
50	69.00			29	48.30	2	1
63	74.75			36	60.95		
				42	69.00		
				48	74.75		

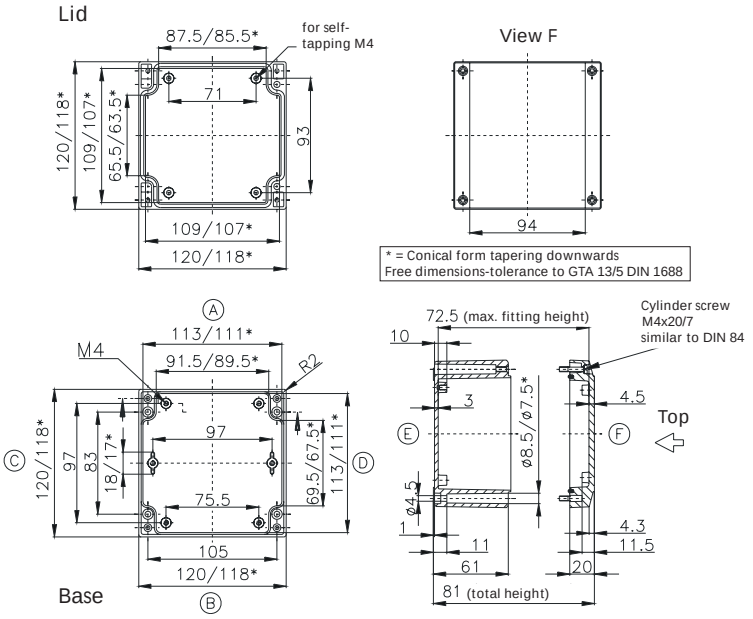

* Please quote mounting side

«ЭйБиЭн»
Тел.\факс +375(17) 390-51-85 info@abn.by Тел. +375(44) 592-00-86
Тел.\факс +375(17) 390-51-86 www.abn.by

Type: **04.12 16 08** External dimensions: ***120 x 160 x 81 mm*** Weight: ***830 g***

DIN rail length in mm	max. fitting length in mm	Mounting plate (thickness in mm)	External mounting brackets	External hinge* set	EMC version	SWB / SBG / SBGL corrosion protection	Allen lid screws	Silicone lid seal	Sealable lid screws in steel	Lid safety strip
TS 15/TS 35										
148	70	2	•	•	•	•	•	•	•	•

Maximum number of cable glands to ***DIN 50262****

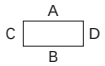

M	Corner dim.	Side A/B	Side C/D	*PG*	Corner dim.	Side A/B	Side C/D
12	17.25	21	11	7	17.25	21	11
16	25.30	10	6	9	21.85	12	6
20	27.60	8	4	11	25.30	10	5
25	37.95	4	2	13,5	27.60	8	4
32	48.30	3	1	16	31.05	5	2
40	60.95			21	37.95	3	2
50	69.00			29	48.30	2	1
63	74.75			36	60.95		
				42	69.00		
				48	74.75		

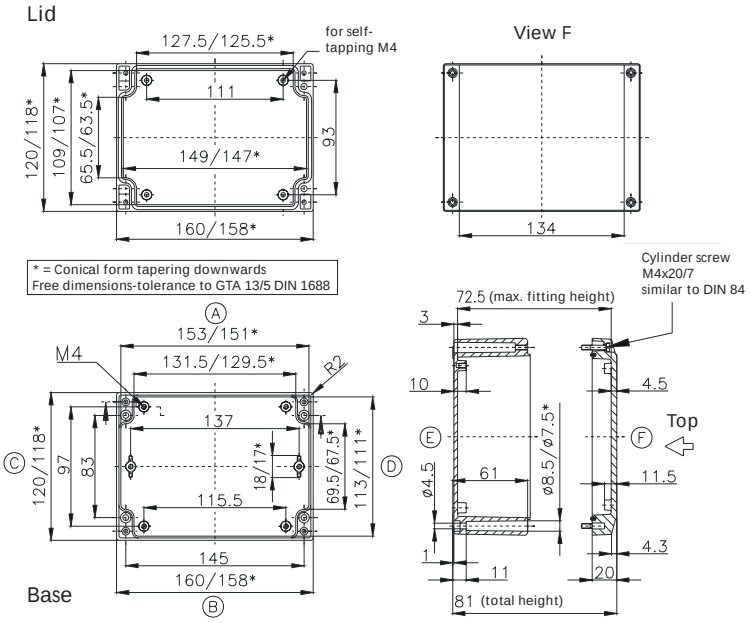

Type: **04.14 14 07** External dimensions: ***140 x 140 x 71 mm*** Weight: ***800 g***

DIN rail length in mm	max. fitting length in mm	Mounting plate (thickness in mm)	External mounting brackets	External hinge* set	EMC version	SWB / SBG / SBGL corrosion protection	Allen lid screws	Silicone lid seal	Sealable lid screws in steel	Lid safety strip
TS 15/TS 35										
126	110	2	•	•	•	•	•	•	•	•

Maximum number of cable glands to ***DIN 50262****

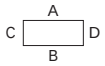

M	Corner dim.	Side A/B	Side C/D	*PG*	Corner dim.	Side A/B	Side C/D
12	17.25	12	10	7	17.25	12	10
16	25.30	5	4	9	21.85	9	7
20	27.60	4	3	11	25.30	5	4
25	37.95	3	2	13.5	27.60	4	3
32	48.30			16	31.05	3	3
40	60.95			21	37.95	3	2
50	69.00			29	48.30		
63	74.75			36	60.95		
				42	69.00		
				48	74.75		

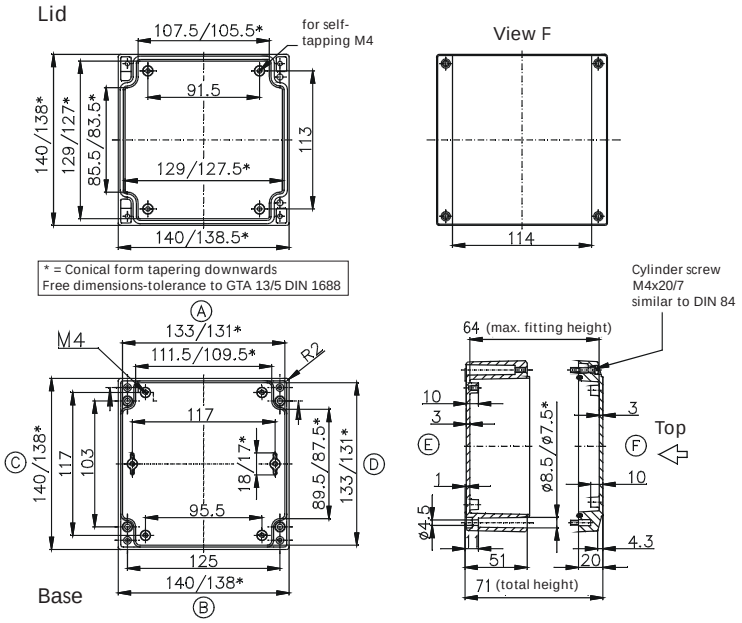

* Please quote mounting side

«ЭйБиЭн»
Тел.\факс +375(17) 390-51-85 info@abn.by Тел. +375(44) 592-00-86
Тел.\факс +375(17) 390-51-86 www.abn.by

Type: **04.14 18 07** External dimensions: **140 x 180 x 71 mm** Weight: **1000 g**

DIN rail length in mm	max. fitting length in mm	Mounting plate (thickness in mm)	External mounting brackets	External hinge* set	EMC version	SWB / SBG / SBGL corrosion protection	Allen lid screws	Silicone lid seal	Sealable lid screws in steel	Lid safety strip
TS 15/TS 35										
163	150	2	•	•	•	•	•	•	•	•

Maximum number of cable glands to ***DIN 50262****

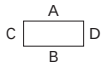

M	Corner dim.	Side A/B	Side C/D	PG	Corner dim.	Side A/B	Side C/D
12	17.25	17	10	7	17.25	17	10
16	25.30	8	4	9	21.85	13	7
20	27.60	6	3	11	25.30	7	4
25	37.95	4	2	13.5	27.60	6	3
32	48.30			16	31.05	5	3
40	60.95			21	37.95	4	2
50	69.00			29	48.30		
63	74.75			36	60.95		
				42	69.00		
				48	74.75		

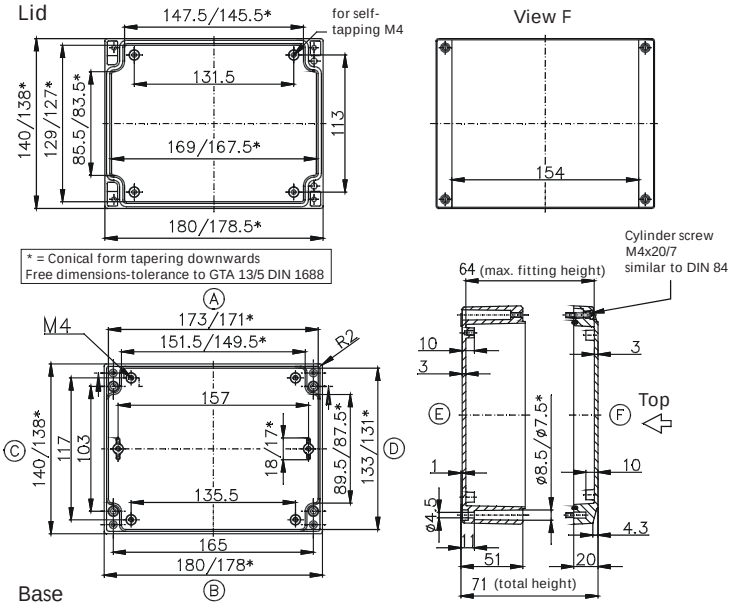

Type: **04.14 22 07** External dimensions: **140 x 220 x 72 mm** Weight: **1266 g**

DIN rail length in mm	max. fitting length in mm	Mounting plate (thickness in mm)	External mounting brackets	External hinge* set	EMC version	SWB / SBG / SBGL corrosion protection	Allen lid screws	Silicone lid seal	Sealable lid screws in steel	Lid safety strip
TS 15/TS 35										
206	190	2	•	•	•	•	•	•	•	•

Maximum number of cable glands to ***DIN 50262****

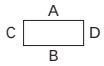

M	Corner dim.	Side A/B	Side C/D	PG	Corner dim.	Side A/B	Side C/D
12	17.25	22	10	7	17.25	22	10
16	25.30	10	4	9	21.85	16	7
20	27.60	8	3	11	25.30	9	4
25	37.95	5	2	13.5	27.60	8	3
32	48.30			16	31.05	6	3
40	60.95			21	37.95	5	2
50	69.00			29	48.30		
63	74.75			36	60.95		
				42	69.00		
				48	74.75		

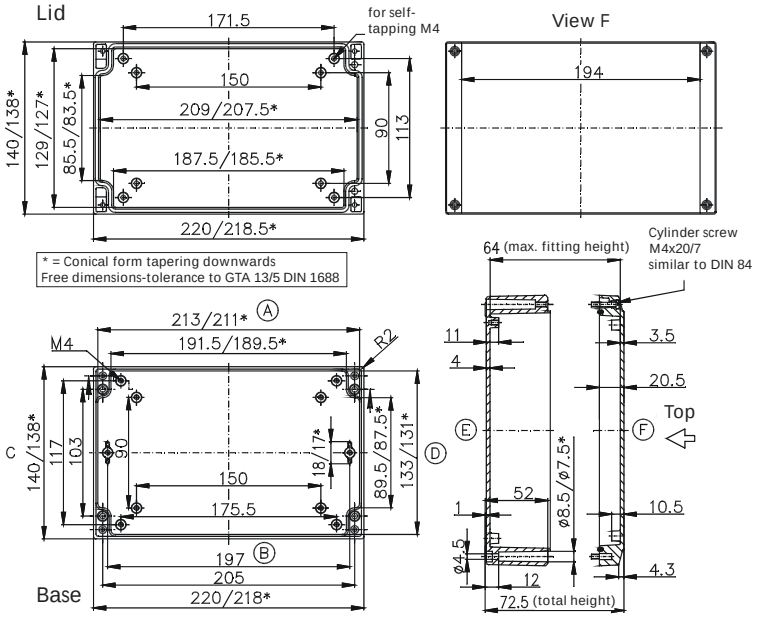

* Please quote mounting side

«ЭйБиЭн»
Тел.\факс +375(17) 390-51-85 info@abn.by Тел. +375(44) 592-00-86
Тел.\факс +375(17) 390-51-86 www.abn.by

Type: ***04.16 16 08*** External dimensions: ***160 x 160 x 81 mm*** Weight: ***1120 g***

DIN rail length in mm	max. fitting length in mm	Mounting plate (thickness in mm)	External mounting brackets	External hinge* set	EMC version	SWB / SBG / SBGL corrosion protection	Allen lid screws	Silicone lid seal	Sealable lid screws in steel	Lid safety strip
TS 15/TS 35										
148	130	2	•	•	•	•	•	•	•	•

Maximum number of cable glands to ***DIN 50262****

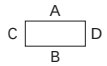

M	Corner dim.	Side A/B	Side C/D	*PG*	Corner dim.	Side A/B	Side C/D
12	17.25	21	18	7	17.25	21	18
16	25.30	10	8	9	21.85	12	10
20	27.60	8	7	11	25.30	10	8
25	37.95	4	3	13.5	27.60	8	7
32	48.30	3	2	16	31.05	5	4
40	60.95			21	37.95	3	3
50	69.00			29	48.30	2	2
63	74.75			36	60.95		
				42	69.00		
				48	74.75		

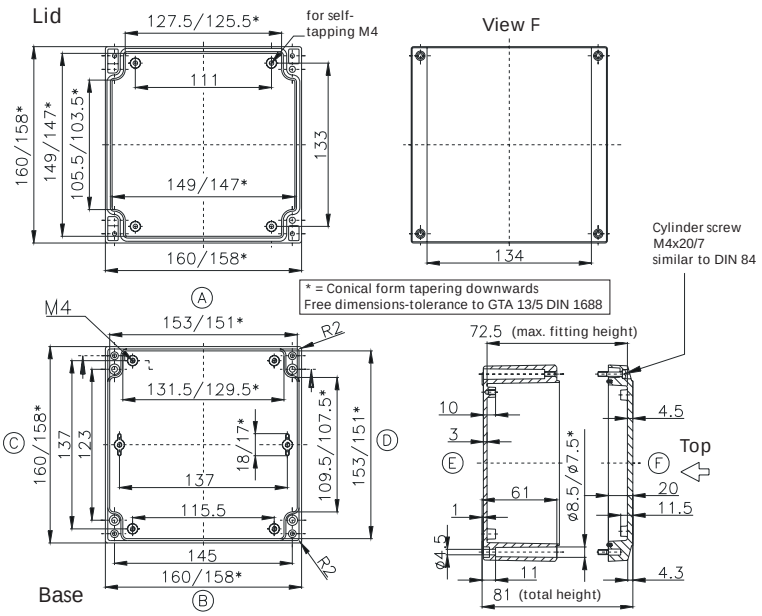

Type: ***04.16 24 08*** External dimensions: ***160 x 240 x 81 mm*** Weight: ***1900 g***

DIN rail length in mm	max. fitting length in mm	Mounting plate (thickness in mm)	External mounting brackets	External hinge* set	EMC version	SWB / SBG / SBGL corrosion protection	Allen lid screws	Silicone lid seal	Sealable lid screws in steel	Lid safety strip
TS 15/TS 35										
228	210	2	•	•	•	•	•	•	•	•

Maximum number of cable glands to ***DIN 50262****

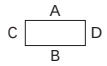

M	Corner dim.	Side A/B	Side C/D	*PG*	Corner dim.	Side A/B	Side C/D
12	17.25	36	18	7	17.25	36	18
16	25.30	16	8	9	21.85	18	10
20	27.60	14	7	11	25.30	16	8
25	37.95	6	3	13.5	27.60	14	7
32	48.30	4	2	16	31.05	9	4
40	60.95			21	37.95	6	3
50	69.00			29	48.30	4	2
63	74.75			36	60.95		
				42	69.00		
				48	74.75		

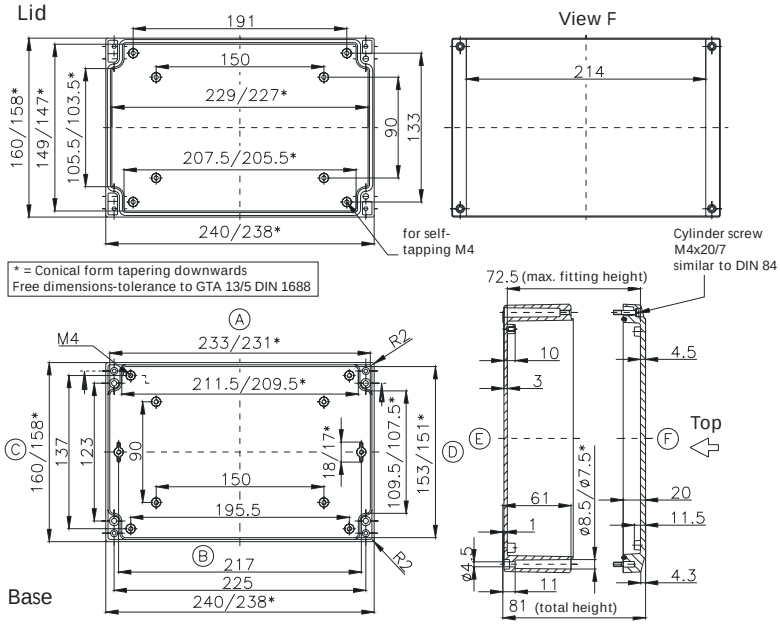

* Please quote mounting side

«ЭйБиЭн»
Тел.\факс +375(17) 390-51-85 info@abn.by Тел. +375(44) 592-00-86
Тел.\факс +375(17) 390-51-86 www.abn.by

Type: **04.20 20 07** External dimensions: **200 x 200 x 72 mm** Weight: **1440 g**

DIN rail length in mm	max. fitting length in mm	Mounting plate (thickness in mm)	External mounting brackets	External hinge* set	EMC version	SWB / SBG / SBGL corrosion protection	Allen lid screws	Silicone lid seal	Sealable lid screws in steel	Lid safety strip
TS 15/TS 35										
188	170	2	•	•	•	•	•	•	•	•

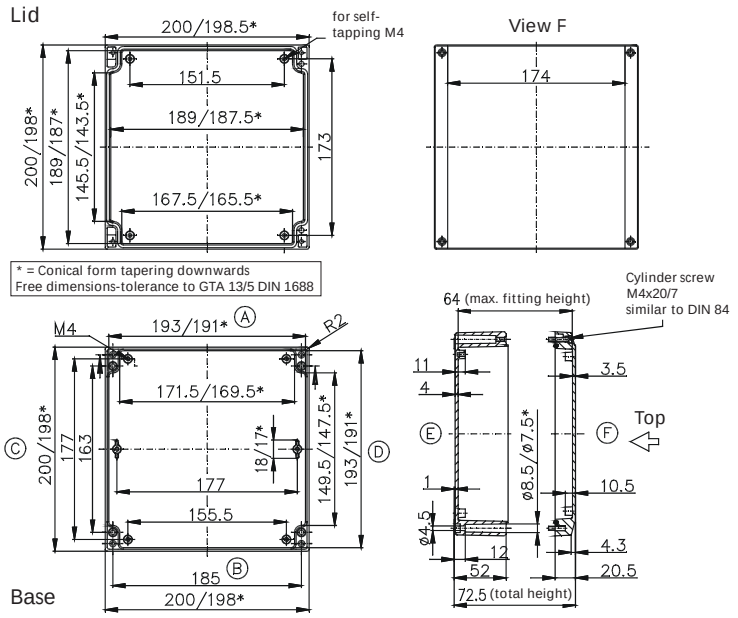

Maximum number of cable glands to ***DIN 50262****

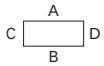

M	Corner dim.	Side A/B	Side C/D	PG	Corner dim.	Side A/B	Side C/D
12	17.25	20	17	7	17.25	20	17
16	25.30	9	8	9	21.85	14	13
20	27.60	7	6	11	25.30	8	7
25	37.95	4	4	13.5	27.60	7	6
32	48.30			16	31.05	6	5
40	60.95			21	37.95	4	4
50	69.00			29	48.30		
63	74.75			36	60.95		
				42	69.00		
				48	74.75		

Type: **04.20 28 07** External dimensions: **200 x 280 x 72 mm** Weight: **1920 g**

DIN rail length in mm	max. fitting length in mm	Mounting plate (thickness in mm)	External mounting brackets	External hinge* set	EMC version	SWB / SBG / SBGL corrosion protection	Allen lid screws	Silicone lid seal	Sealable lid screws in steel	Lid safety strip
TS 15/TS 35										
266	250	2	•	•	•	•	•	•	•	•

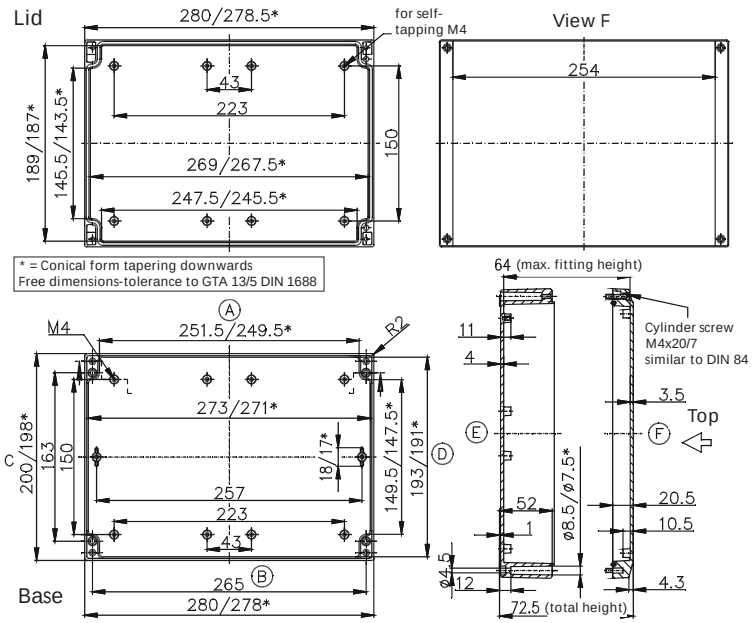

Maximum number of cable glands to ***DIN 50262****

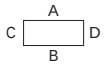

M	Corner dim.	Side A/B	Side C/D	PG	Corner dim.	Side A/B	Side C/D
12	17.25	29	17	7	17.25	29	17
16	25.30	13	8	9	21.85	22	13
20	27.60	10	6	11	25.30	12	7
25	37.95	6	4	13.5	27.60	10	6
32	48.30			16	31.05	8	6
40	60.95			21	37.95	6	4
50	69.00			29	48.30		
63	74.75			36	60.95		
				42	69.00		
				48	74.75		

* Please quote mounting side

«ЭйБиЭн»
Тел.\факс +375(17) 390-51-85 info@abn.by Тел. +375(44) 592-00-86
Тел.\факс +375(17) 390-51-86 www.abn.by

UL® / cUL®

- Robust aluminium enclosure for mechanical engineering and automation technology
- Fixing options for DIN rails and mounting plates
- Usable in wide temperature area

Technical Data

Material:

DIN EN 1706 EN AC-AlSi 12 (Fe)

Painting:

powder coating

Colour:

RAL 7001, silver grey

special colour on request

Ingress protection:

IP 66 to EN 60529

higher protection on request

Impact resistance:

7 Joule to EN 60079-0

Temperature range:

PU (polyurethane) seal (std.):	-40°C to +90°C
CR (chloroprene) seal:	-40°C to +100°C
VMQ(silicone) seal (optional):	-60°C to +130°C

Included in delivery

Aluminium enclosure consisting of lid, seal incl. captive +/- stainless steel screws, base with 2 or 4 earthing screws

«ЭйБиЭн»
Тел.\факс +375(17) 390-51-85 info@abn.by Тел. +375(44) 592-00-86
Тел.\факс +375(17) 390-51-86 www.abn.by

Programme range

Order No.	W x L x H (mm)	DIN rails for terminals TS 15	DIN rails for terminals TS 35	Earthing rail, number of clamps	Mounting plate, thickness in mm [1]	External brackets set [2]	External aluminium hinge pair [3], [4]	Internal hinge pair [2], [4]	Quick lock [5]	Turn bolt fastener [4]
Standard enclosures										
01.05 05 03	45 x 50 x 30									
01.06 06 03	64 x 58 x 34									
01.06 10 03	64 x 98 x 34									
01.06 15 03	64 x 150 x 34									
01.06 19 03	64 x 185 x 34	•								
01.08 08 06	80 x 75 x 57	•			1,5					
01.08 13 06	80 x 125 x 57	•			1,5					
01.08 18 06	80 x 175 x 57	•			1,5					
01.08 25 05	80 x 250 x 52	•								
01.10 10 08	100 x 100 x 81	•			1,5	•	•		•	
01.10 16 08	100 x 160 x 81	•			1,5	•	•		•	
01.10 20 08	100 x 200 x 81	•			1,5	•	•		•	
01.12 12 08	120 x 122 x 81		•	6	1,5	•	•		•	
01.12 12 09	120 x 122 x 91		•	6	1,5	•	•		•	
01.12 22 08	120 x 220 x 81		•	13	1,5	•	•		•	
01.12 22 09	120 x 220 x 91		•	13	1,5	•	•		•	
01.12 22 12	120 x 220 x 118		•	13	1,5	•	•		•	
01.12 36 08	120 x 360 x 81		•	23	1,5	•	•		•	
01.14 14 09	140 x 140 x 91		•	6	1,5	•	•		•	
01.14 20 09	140 x 200 x 91		•	11	1,5	•	•	•	•	•
01.16 16 09	160 x 160 x 91		•	8	1,5	•	•	•	•	•
01.16 26 09	160 x 260 x 91		•	16	1,5	•	•	•	•	•
01.16 36 09	160 x 360 x 91		•	23	1,5	•	•	•	•	•
01.16 56 09	160 x 560 x 91		•	36	2,0	•	•	•	•	•
01.18 18 10	180 x 180 x 101		•	8	1,5	•	•	•	•	•
01.18 28 10	180 x 280 x 101		•	17	1,5	•	•	•	•	•
01.23 10 11	230 x 100 x 111		•	-	1,5	•	•	•	•	•
01.23 20 11	232 x 202 x 111		•	10	1,5	•	•	•	•	•
01.23 20 18	232 x 202 x 181		•	10	1,5	•	•	•	•	•
01.23 28 11	230 x 280 x 111		•	16	1,5	•	•	•	•	•
01.23 33 11	230 x 330 x 111		•	21	1,5	•	•	•	•	•
01.23 33 18	230 x 330 x 181		•	21	1,5	•	•	•	•	•
01.23 40 11	230 x 400 x 111		•	25	2	•	•	•	•	•
01.23 40 23	230 x 400 x 225		•	25	2	•	•	•	•	•
01.23 60 11	230 x 600 x 111		•	40	2	•	•	•	•	•
01.31 40 11	313 x 404 x 111		•	25	2	•	•	•	•	•
01.31 40 14	312 x 403 x 141		•	25	2	•	•	•	•	•
01.31 40 18	313 x 404 x 181		•	25	2	•	•	•	•	•
01.31 40 23	313 x 404 x 227		•	25	2	•	•	•	•	•
01.31 60 11	310 x 600 x 111		•	40	2	•	•	•	•	•
01.31 60 18	310 x 600 x 181		•	40	2	•	•	•	•	•
01.60 60 20	600 x 600 x 202		•		2,5					
Field enclosure with integrated external fastening										
01.06 12 00	64 x 115 x 34									
01.06 19 00	64 x 185 x 34									

[1]) galvanized sheet steel [2]) stainless steel [3]) diecast alu [4]) Please quote installation side A-D when ordering [5]) on request

Other accessories

EMC screening (without type 01.60 60 20)
SWB/SBG/SBGL corrosion protection (RAL 5009)
Allen lid screws (without type 01.60 60 20)
Silicone lid seal up to +130°C
Sealable lid screws in steel (without type 01.60 60 20)

«ЭйБиЭн»
Тел.\факс +375(17) 390-51-85 info@abn.by Тел. +375(44) 592-00-86
Тел.\факс +375(17) 390-51-86 www.abn.by

Terminal mounting

	Phoenix															Earth conductor connection													
DIN rail TS 15	X	X	X																										
DIN rail TS 35				X	X	X	X	X	X	X	X	X	X	X	X														
Voltage (V)	250	400	500	500	800	800	800	800	800	800	1000	1000	1000	1000	1000														
Current (A)	24	32	41	17	24	32	41	57	76	101	150	150	232	309	415														
Nom. cross section (mm²)	2.5	3	5	1.5	2.5	2.5	4	6	10	16	35	50	95	150	240														
Terminal width (mm)	5.2	5.2	6.2	4.2	5.2	5.2	6.2	8.2	10.2	12.2	15.2	20	25	31	36														
Terminal type / Type	MBK 2,5 E	MBK 3 / E-Z	MBK 5 / E-Z	UK 1,5 N	UK 2,5 N	UK 3 N	UK 5 N	UK 6 N	UK 10 N	UK 16 N	UK 35	UKH 50	UKH 95	UKH 150	UKH 240	MSLKG 5 insulated, green/yellow	USLKG 1,5 N insulated green/yellow	USLKG 2,5 N insulated green/yellow	USLKG 6 N insulated green/yellow	USLKG 10 N insulated green/yellow	USKLG 16 N insulated green/yellow	USLKG 3 insulated green/yellow	USLKG 5 insulated green/yellow	USLKG 50 insulated green/yellow	USLKG 95 insulated green/yellow		Earthing bar 2.5 mm² with cable lug max. 10 mm²	Earthing screw M4 with cable lug max. 6 mm²	M6 with cable lug max. 35 mm²	
01.05 05 03																													
01.06 06 03	4																											1	
01.06 10 03	11																											2	
01.06 15 03	16																											2	
01.06 19 03	28																											2	
01.08 08 06	9	9	7																									2	
01.08 13 06	18	18	15																									2	
01.08 18 06	28	28	23																									2	
01.08 25 05	43	43	36																									2	
01.10 10 08	14	14	11	17																								2	
01.10 16 08	25	25	21	31																								2	
01.10 20 08	33	33	27	41																								2	
01.12 12 08				20	16	16	13	10																		5			
01.12 12 09				20	16	16	13	10																		5		4	
01.12 22 08				43	35	35	29	22	17	15																13		4	
01.12 22 09				43	35	35	29	22	17	15																13		4	
01.12 22 12				44	35	35	30	22	18	15																13		4	
01.12 36 08				76	61	61	51	39	31	26																23		4	
01.14 14 09				24	20	20	16	12	10																	6		4	
01.14 20 09				39	31	31	26	20	16	13																11		4	
01.16 16 09				29	23	23	19	14	11	10																8		4	
01.16 26 09				53	42	42	35	27	21	18	14															16		4	
01.16 36 09				76	61	61	51	39	31	26	21															23		4	
01.16 56 09				124	100	100	84	63	51	42	34															38		4	
01.18 18 10				34	27	27	23	17	14	11																8		4	
01.18 28 10				57	46	46	39	29	23	19	15															17		4	
01.23 10 11				45	36	36	30	23	18																	13		4	
01.23 20 11				39*	31*	31*	26*	20*	16*	13*	10*	8								as required						12		4	
01.23 20 18				39*	31*	31*	26*	20*	16*	13*	10*	8														12		4	
01.23 28 11				57*	46*	46*	39*	29*	23*	19*	15*	12														16		4	
01.23 33 11				69*	56*	56*	47*	35*	28*	23*	19*	14														21		4	
01.23 33 18				69*	56*	56*	47*	35*	28*	23*	19*	14														21		4	
01.23 40 11				85*	69*	69*	57*	43*	35*	29*	23*	17														25		4	
01.23 40 23				85*	69*	69*	57*	43*	35*	29*	23*	17														25		4	
01.23 60 11				133*	107*	107*	90*	68*	54*	45*	36*	27														41		4	
01.31 40 11				85**	69**	69**	57**	43**	35**	29**	23**	17*														26		4	
01.31 40 14				85**	69**	69**	57**	43**	35**	29**	23**	17*	14													26		4	
01.31 40 18				85**	69**	69**	57**	43**	35**	29**	23**	17*	14													26		4	
01.31 40 23				85**	69**	69**	57**	43**	35**	29**	23**	17*	14													26		4	
01.31 60 11				133**	107**	107**	90**	68**	54**	45**	36**	27*														40		4	
01.31 60 18				133**	107**	107**	90**	68**	54**	45**	36**	27*	22													40		4	
01.60 60 20				131**	106**	106**	89**	67**	54**	45**	36**	27**	22**	17	15											40		4	
Field enclosure with integrated external fastening																													
01.06 12 00																													
01.06 19 00																													

* 2 DIN rails possible = double number of terminals
** 3 DIN rails possible = triple number of terminals

«ЭйБиЭн»
Тел.\факс +375(17) 390-51-85 info@abn.by Тел. +375(44) 592-00-86
Тел.\факс +375(17) 390-51-86 www.abn.by

Terminal mounting

	Weidmüller																				Earth conductor connection			
DIN rail TS 15					X	X	X	X																
DIN rail TS 35									X	X	X	X	X	X	X	X	X	X	X	X				
Voltage (V)	500	400	400	400	250	400	250	400	500	800	800	800	1000	1000	1000	1000	1000	1000	1000	1000				
Current (A)	24	32	32	32	17	15	24	32	24	24	32	41	57	76	125	192	232	269	309	415				
Nom. cross section (mm²)	2,5	4	4	4	1,5	1,5	2,5	4	2,5	2,5	4	6	10	16	35	70	95	120	150	240				
Terminal width (mm)	38	38	52	92	5,1	3,5	5,1	6,1	5,1	5,1	6,1	8	10	12	16	20,5	27	27	32	36				
Terminal type / Type	MK 3/4 (4-pole)	BK 4 (4-pole)	BK 6 (6-pole)	BK 12 (12-pole)	AKZ 1,5	WDU 1,5 / R 3,5	AKZ 2,5	AKZ 4	WDU 2,5 N	WDU 2,5	WDU 4	WDU 6	WDU 10	WDU 16	WDU 35	WDU 70 N	WDU 70 / 95	WDU 95 / 120 N	WDU 120 / 150	WDU 240	WPE	Earthing bar 2.5 mm² with cable lug max. 10 mm²	Earthing screw M4 with cable lug max. 6 mm²	M6 with cable lug max. 35 mm²
01.05 05 03	1																							
01.06 06 03		1																					1	
01.06 10 03			1																				2	
01.06 15 03				1																			2	
01.06 19 03				1																			2	
01.08 08 06					8	11	8	6	8														2	
01.08 13 06					18	26	18	15	18														2	
01.08 18 06					28	40	28	23	28														2	
01.08 25 05					43	61	43	36	43														2	
01.10 10 08					13	18	13	10	13														2	
01.10 16 08					25	36	25	21	25														2	
01.10 20 08					33	47	33	27	33														2	
01.12 12 08										16	13	10										5		
01.12 12 09										16	13	10	8									5		4
01.12 22 08										35	29	22	17									13		4
01.12 22 09										35	29	22	17									13		4
01.12 22 12										36	30	22	18									13		4
01.12 36 08										63	52	39	31								as required	23		4
01.14 14 09										20	16	12	10									6		4
01.14 20 09										32	26	20	16	13								11		4
01.16 16 09										23	19	14	11	9								8		4
01.16 26 09										43	36	27	21	18								16		4
01.16 36 09										63	52	39	31	26								23		4
01.16 56 09										103	86	64	51	43								38		4
01.18 18 10										28	23	17	14	11								8		4
01.18 28 10										47	39	29	23	19								17		4
01.23 10 11											31	23	18	15								13		4
01.23 20 11										32*	26*	20*	16*	13*	10	7						12		4
01.23 20 18										32*	26*	20*	16*	13*	10	7						12		4
01.23 28 11										47*	39*	29*	23*	19*	14	11						16		4
01.23 33 11										57*	48*	36*	28*	24*	18	14						21		4
01.23 33 18										57*	48*	36*	28*	24*	18	14						21		4
01.23 40 11										71*	59*	44*	35*	29*	22*	17						25		4
01.23 40 23										71*	59*	44*	35*	29*	22*	17	13	13				25		4
01.23 60 11										111*	92*	69*	55*	46*	34*	27						41		4
01.31 40 11										71**	59**	44**	35**	29**	22*	17						26		4
01.31 40 14										71**	59**	44**	35**	29**	22*	17						26		4
01.31 40 18										71**	59**	44**	35**	29**	22*	17	13	13				26		4
01.31 40 23										71**	59**	44**	35**	29**	22*	17	13	13				26		4
01.31 60 11										111**	92**	69**	55**	46**	34*	27						40		4
01.31 60 18										111**	92**	69**	55**	46**	34*	27	20	20				40		4
01.60 60 20										109**	91**	68**	54**	45**	34**	26**	20**	20**	15	15		40		4
Field enclosure with integrated external fastening																								
01.06 12 00			1																					
01.06 19 00				1																				

* 2 DIN rails possible = double number of terminals
** 3 DIN rails possible = triple number of terminals

«ЭйБиЭн»
Тел.\факс +375(17) 390-51-85 info@abn.by Тел. +375(44) 592-00-86
Тел.\факс +375(17) 390-51-86 www.abn.by

Accessories

External brackets
set = 4 pcs

Order No.	for enclosure
10.03 11 01	01.08 08 06 - 01.10 20 08
10.03 11 02	01.12 12 08 - 01.31 60 18

Type 10.03 11 01

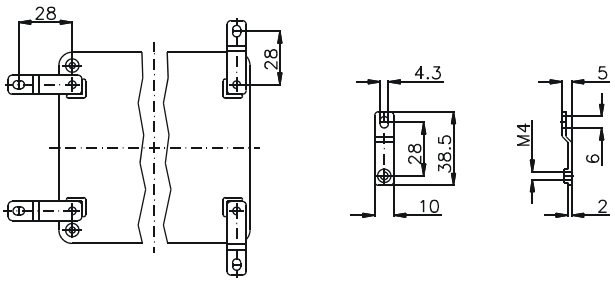

Type 10.03 11 02

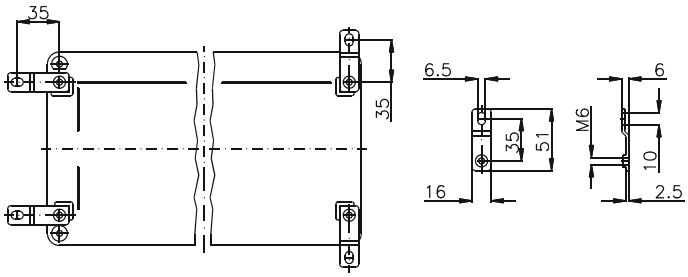

External hinge
opening angle 150°
set = 2 pcs

Order No. ***10.02 70 01***

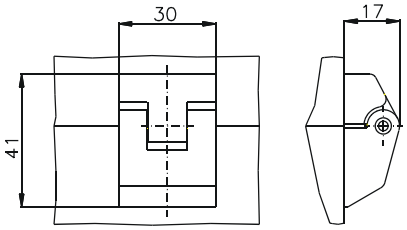

Internal hinge
opening angle 95°
set = 2 pcs

Order No. ***10.02 20 01***

«ЭйБиЭн»
Тел.\факс +375(17) 390-51-85 info@abn.by Тел. +375(44) 592-00-86
Тел.\факс +375(17) 390-51-86 www.abn.by

Type: **01.05 05 03** External dimensions: **45 x 50 x 30 mm** Weight: **91 g**

DIN rail length in mm	max. fitting length in mm	Earthing rail clamp	Mounting plate (thickness in mm)	External mounting brackets	External hinge* set	EMC version	Internal hinge* set	SWB / SBG / SBGL Corr.protection	Allen lid screws	Silicone lid seal	Sealable lid screws in steel	Turn bolt fastener on request	Quick lock
						•		•	•		•		

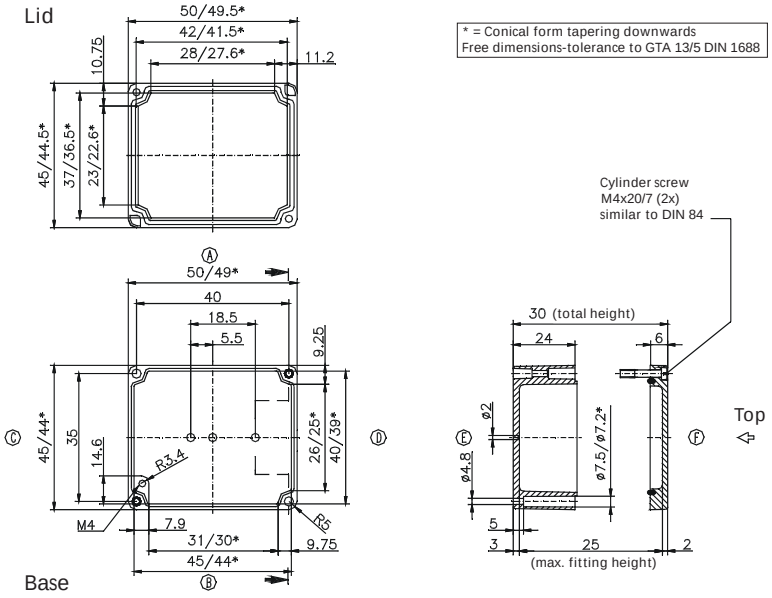

Maximum number of cable glands ***to DIN 50262****

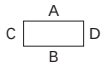

M	Corner dim.	Side A/B	Side C/D	PG	Corner dim.	Side A/B	Side C/D
12	17.25	2	1	7	17.25	2	1
16	25.30			9	21.85	1	
20	27.60			11	25.30		
25	37.95			13.5	27.60		
32	48.30			16	31.05		
40	60.95			21	37.95		
50	69.00			29	48.30		
63	74.75			36	60.95		
				42	69.00		
				48	74.75		

Type: **01.06 06 03** External dimensions: **64 x 58 x 34 mm** Weight: **165 g**

DIN rail length in mm	max. fitting length in mm	Earthing rail clamp	Mounting plate (thickness in mm)	External mounting brackets	External hinge* set	EMC version	Internal hinge* set	SWB / SBG / SBGL Corr.protection	Allen lid screws	Silicone lid seal	Sealable lid screws in steel	Turn bolt fastener on request	Quick lock
						•		•	•	•	•		

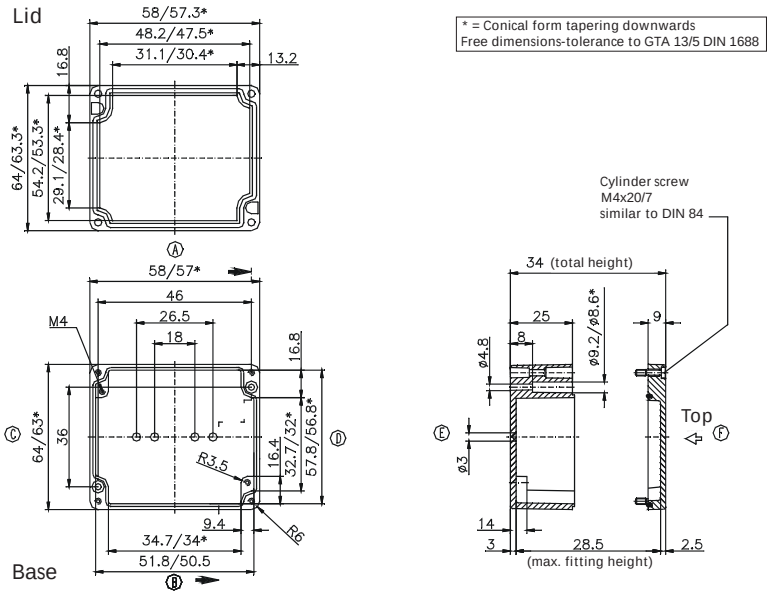

Maximum number of cable glands ***to DIN 50262****

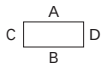

M	Corner dim.	Side A/B	Side C/D	PG	Corner dim.	Side A/B	Side C/D
12	17.25	2	1	7	17.25	2	1
16	25.30			9	21.85	1	1
20	27.60			11	25.30		
25	37.95			13.5	27.60		
32	48.30			16	31.05		
40	60.95			21	37.95		
50	69.00			29	48.30		
63	74.75			36	60.95		
				42	69.00		
				48	74.75		

* Please quote mounting side

«ЭйБиЭн»
Тел.\факс +375(17) 390-51-85 info@abn.by Тел. +375(44) 592-00-86
Тел.\факс +375(17) 390-51-86 www.abn.by

Type: **01.06 10 03** External dimensions: **64 x 98 x 34 mm** Weight: **224 g**

DIN rail length in mm	max. fitting length in mm	Earthing rail clamp	Mounting plate (thickness in mm)	External mounting brackets	External hinge* set	EMC version	Internal hinge* set	SWB / SBG / SBGL Corr.protection	Allen lid screws	Silicone lid seal	Sealable lid screws in steel	Turn bolt fastener on request	Quick lock
TS 15													
87.5						•		•	•	•	•		

Maximum number of cable glands ***to DIN 50262****

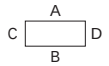

M	Corner dim.	Side A/B	Side C/D	PG	Corner dim.	Side A/B	Side C/D
12	17.25	4	1	7	17.25	4	1
16	25.30			9	21.85	3	1
20	27.60			11	25.30		
25	37.95			13.5	27.60		
32	48.30			16	31.05		
40	60.95			21	37.95		
50	69.00			29	48.30		
63	74.75			36	60.95		
				42	69.00		
				48	74.75		

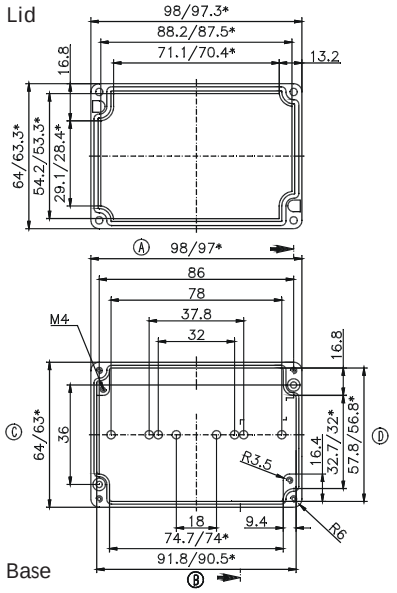

* = Conical form tapering downwards
Free dimensions-tolerance to GTA 13/5 DIN 1688

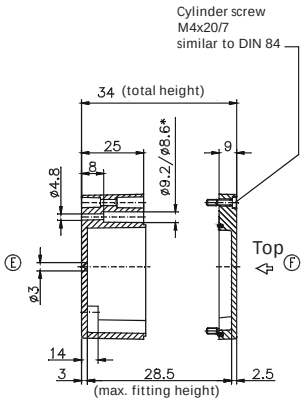

Type: **01.06 12 00** External dimensions: **64 x 115 x 34 mm** Weight: **290 g**

DIN rail length in mm	max. fitting length in mm	Earthing rail clamp	Mounting plate (thickness in mm)	External mounting brackets	External hinge* set	EMC version	Internal hinge* set	SWB / SBG / SBGL Corr.protection	Allen lid screws	Silicone lid seal	Sealable lid screws in steel	Turn bolt fastener on request	Quick lock
						•		•	•	•	•		

Maximum number of cable glands ***to DIN 50262****

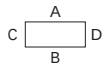

M	Corner dim.	Side A/B	Side C/D	PG	Corner dim.	Side A/B	Side C/D
12	17.25	5	1	7	17.25	5	1
16	25.30			9	21.85	4	1
20	27.60			11	25.30		
25	37.95			13.5	27.60		
32	48.30			16	31.05		
40	60.95			21	37.95		
50	69.00			29	48.30		
63	74.75			36	60.95		
				42	69.00		
				48	74.75		

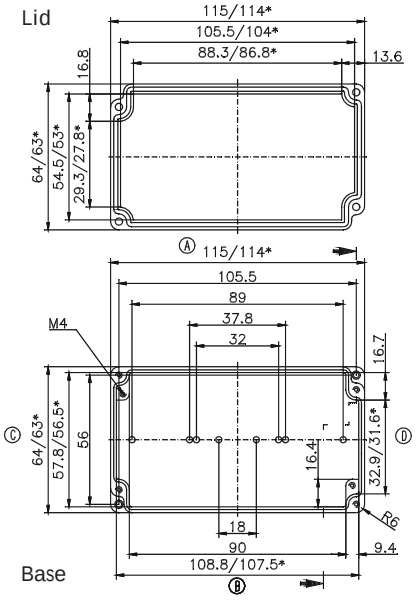

* = Conical form tapering downwards
Free dimensions-tolerance to GTA 13/5 DIN 1688

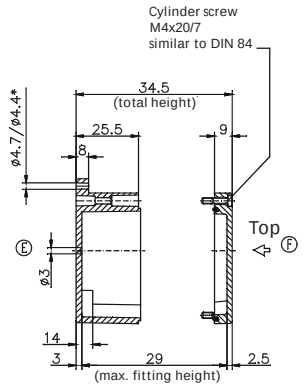

* Please quote mounting side

«ЭйБиЭн»
Тел.\факс +375(17) 390-51-85 info@abn.by Тел. +375(44) 592-00-86
Тел.\факс +375(17) 390-51-86 www.abn.by

Type: **01.06 15 03** External dimensions: ***64 x 150 x 34 mm*** Weight: ***316 g***

DIN rail length in mm	max. fitting length in mm	Earthing rail clamp	Mounting plate (thickness in mm)	External mounting brackets	External hinge* set	EMC version	Internal hinge* set	SWB / SBG / SBGL Corr.protection	Allen lid screws	Silicone lid seal	Sealable lid screws in steel	Turn bolt fastener on request	Quick lock
TS 15													
139						•		•	•	•	•		

Maximum number of cable glands ***to DIN 50262****

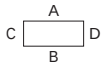

M	Corner dim.	Side A/B	Side C/D	PG	Corner dim.	Side A/B	Side C/D
12	17.25	8	1	7	17.25	8	1
16	25.30			9	21.85	6	1
20	27.60			11	25.30		
25	37.95			13.5	27.60		
32	48.30			16	31.05		
40	60.95			21	37.95		
50	69.00			29	48.30		
63	74.75			36	60.95		
				42	69.00		
				48	74.75		

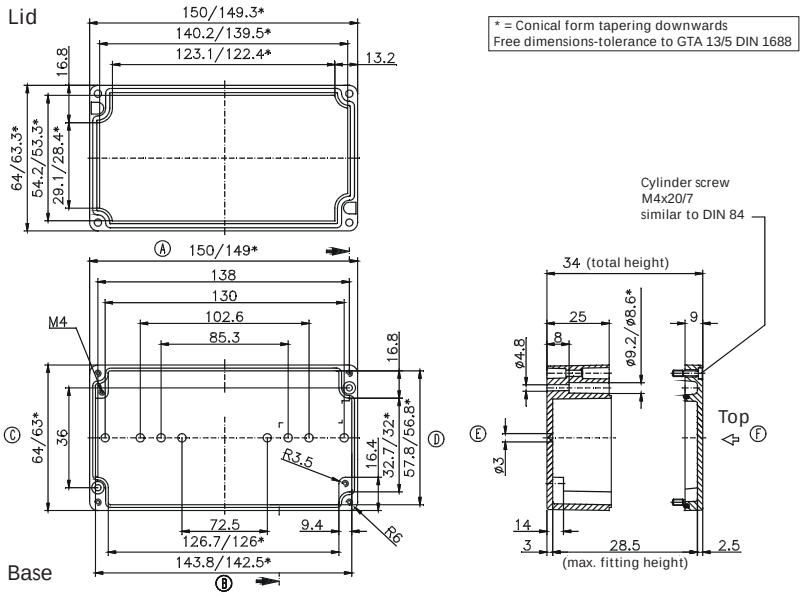

Type: **01.06 19 03** External dimensions: ***64 x 185 x 34 mm*** Weight: ***500 g***

DIN rail length in mm	max. fitting length in mm	Earthing rail clamp	Mounting plate (thickness in mm)	External mounting brackets	External hinge* set	EMC version	Internal hinge* set	SWB / SBG / SBGL Corr.protection	Allen lid screws	Silicone lid seal	Sealable lid screws in steel	Turn bolt fastener on request	Quick lock
TS 15													
174						•		•	•	•	•		

Maximum number of cable glands ***to DIN 50262****

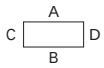

M	Corner dim.	Side A/B	Side C/D	PG	Corner dim.	Side A/B	Side C/D
12	17.25	10		7	17.25	10	
16	25.30			9	21.85		
20	27.60			11	25.30		
25	37.95			13.5	27.60		
32	48.30			16	31.05		
40	60.95			21	37.95		
50	69.00			29	48.30		
63	74.75			36	60.95		
				42	69.00		
				48	74.75		

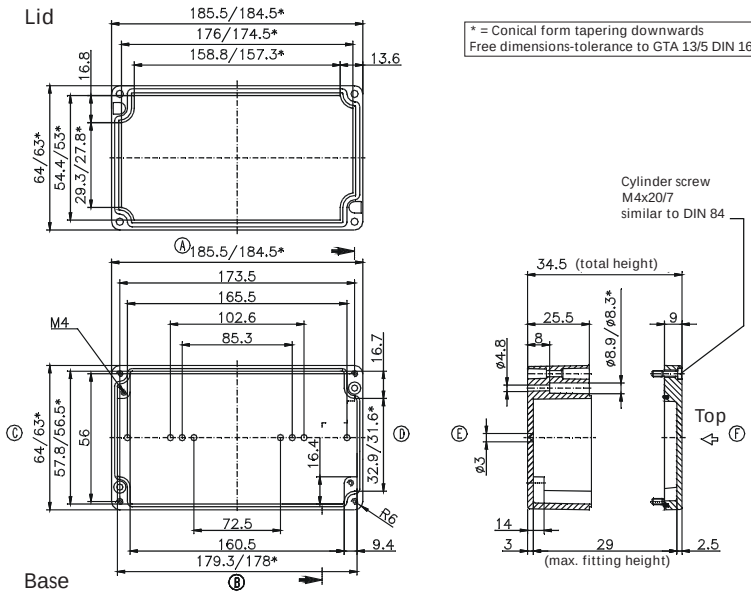

* Please quote mounting side

«ЭйБиЭн»
Тел.\факс +375(17) 390-51-85 info@abn.by Тел. +375(44) 592-00-86
Тел.\факс +375(17) 390-51-86 www.abn.by

Type: **01.06 19 00** External dimensions: **64 x 185 x 34 mm** Weight: **420 g**

DIN rail length in mm	max. fitting length in mm	Earthing rail clamp	Mounting plate (thickness in mm)	External mounting brackets	External hinge* set	EMC version	Internal hinge* set	SWB / SBG / SBGL Corr.protection	Allen lid screws	Silicone lid seal	Sealable lid screws in steel	Turn bolt fastener on request	Quick lock
TS 15													
174						•		•	•	•	•		

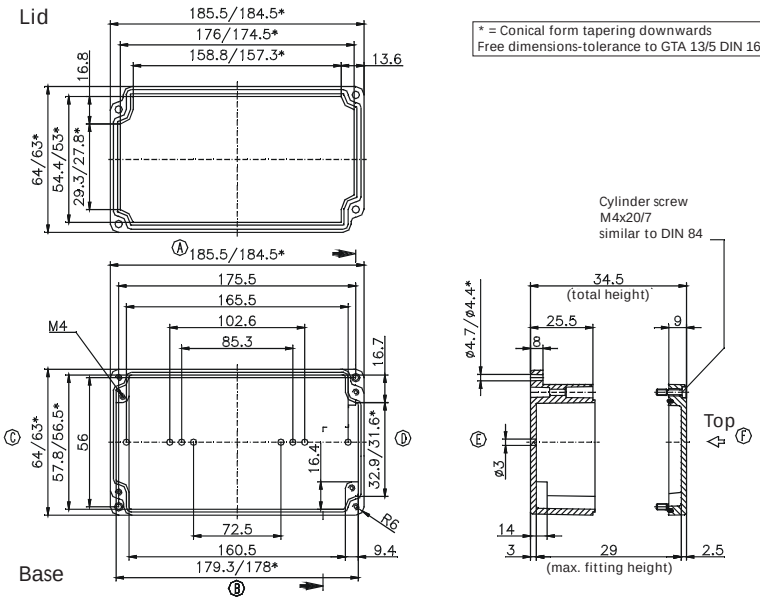

* = Conical form tapering downwards
Free dimensions-tolerance to GTA 13/5 DIN 1688

Maximum number of cable glands ***to DIN 50262****

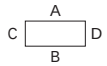

M	Corner dim.	Side A/B	Side C/D	PG	Corner dim.	Side A/B	Side C/D
12	17.25	10	1	7	17.25	10	1
16	25.30			9	21.85	7	1
20	27.60			11	25.30		
25	37.95			13.5	27.60		
32	48.30			16	31.05		
40	60.95			21	37.95		
50	69.00			29	48.30		
63	74.75			36	60.95		
				42	69.00		
				48	74.75		

Type: **01.08 08 06** External dimensions: **80 x 75 x 57 mm** Weight: **360 g**

DIN rail length in mm	max. fitting length in mm	Earthing rail clamp	Mounting plate (thickness in mm)	External mounting brackets	External hinge* set	EMC version	Internal hinge* set	SWB / SBG / SBGL Corr.protection	Allen lid screws	Silicone lid seal	Sealable lid screws in steel	Turn bolt fastener on request	Quick lock
TS 15													
63	46		1.5	•		•		•	•	•	•		•

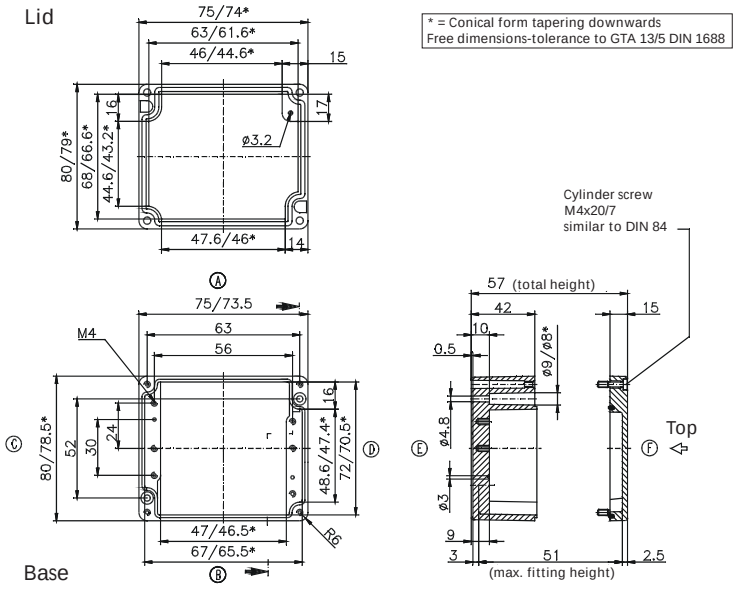

* = Conical form tapering downwards
Free dimensions-tolerance to GTA 13/5 DIN 1688

Maximum number of cable glands ***to DIN 50262****

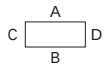

M	Corner dim.	Side A/B	Side C/D	PG	Corner dim.	Side A/B	Side C/D
12	17.25	3	5	7	17.25	2	5
16	25.30	1	2	9	21.85	1	2
20	27.60	1	2	11	25.30	1	2
25	37.95	1	1	13.5	27.60	1	2
32	48.30			16	31.05	1	1
40	60.95			21	37.95		
50	69.00			29	48.30		
63	74.75			36	60.95		
				42	69.00		
				48	74.75		

* Please quote mounting side

«ЭйБиЭн»
Тел.\факс +375(17) 390-51-85 info@abn.by Тел. +375(44) 592-00-86
Тел.\факс +375(17) 390-51-86 www.abn.by

Type: **01.08 13 06** External dimensions: **80 x 125 x 57 mm** Weight: **500 g**

DIN rail length in mm	max. fitting length in mm	Earthing rail clamp	Mounting plate (thickness in mm)	External mounting brackets	External hinge* set	EMC version	Internal hinge* set	SWB / SBG / SBGL Corr.protection	Allen lid screws	Silicone lid seal	Sealable lid screws in steel	Turn bolt fastener on request	Quick lock
TS 15													
113	96		1.5	•		•		•	•		•		•

Maximum number of cable glands ***to DIN 50262****

A C D B

M	Corner dim.	Side A/B	Side C/D	PG	Corner dim.	Side A/B	Side C/D
12	17.25	9	5	7	17.25	8	5
16	25.30	4	2	9	21.85	6	2
20	27.60	3	2	11	25.30	3	2
25	37.95	2	1	13.5	27.60	3	2
32	48.30			16	31.05	2	1
40	60.95			21	37.95	2	
50	69.00			29	48.30		
63	74.75			36	60.95		
				42	69.00		
				48	74.75		

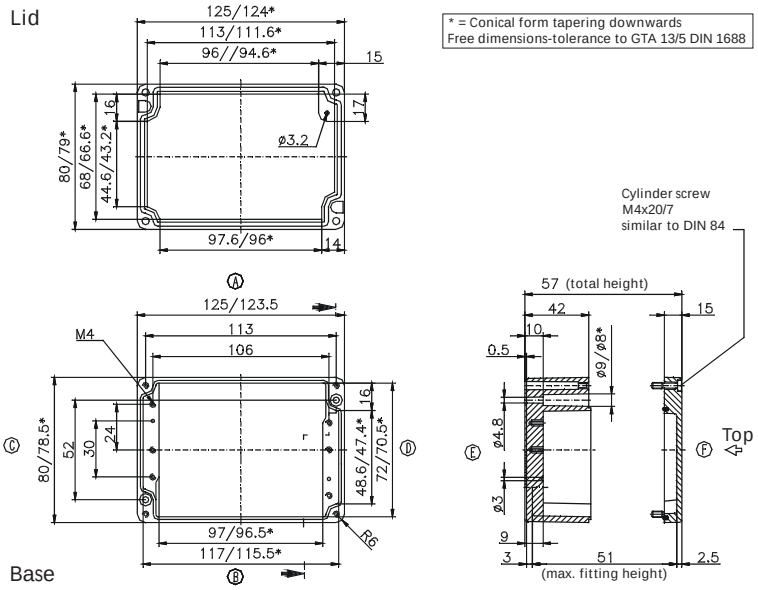

Type: **01.08 18 06** External dimensions: **80 x 175 x 57 mm** Weight: **630 g**

DIN rail length in mm	max. fitting length in mm	Earthing rail clamp	Mounting plate (thickness in mm)	External mounting brackets	External hinge* set	EMC version	Internal hinge* set	SWB / SBG / SBGL Corr.protection	Allen lid screws	Silicone lid seal	Sealable lid screws in steel	Turn bolt fastener on request	Quick lock
TS 15													
163	146		1.5	•		•		•	•	•	•		•

Maximum number of cable glands ***to DIN 50262****

A C D B

M	Corner dim.	Side A/B	Side C/D	PG	Corner dim.	Side A/B	Side C/D
12	17.25	14	5	7	17.25	14	5
16	25.30	6	2	9	21.85	9	2
20	27.60	5	2	11	25.30	6	2
25	37.95	3	1	13.5	27.60	5	2
32	48.30			16	31.05	4	1
40	60.95			21	37.95	3	
50	69.00			29	48.30		
63	74.75			36	60.95		
				42	69.00		
				48	74.75		

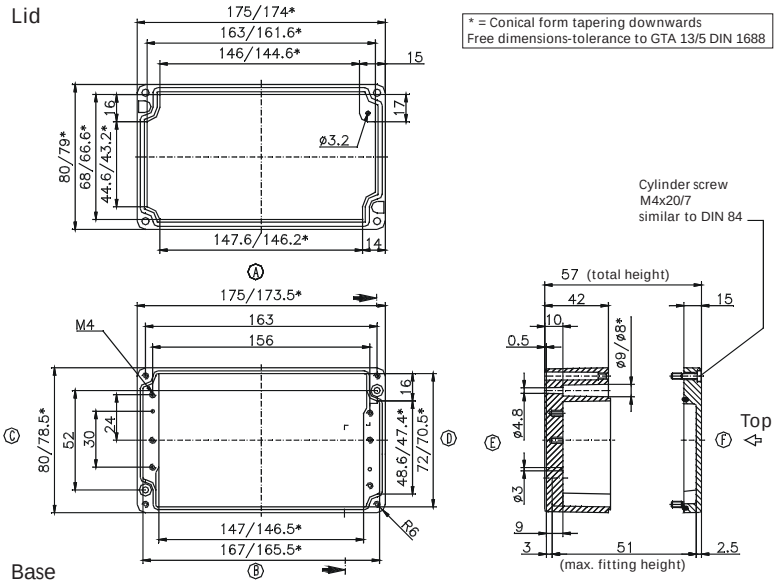

* Please quote mounting side

«ЭйБиЭн»
Тел.\факс +375(17) 390-51-85 info@abn.by Тел. +375(44) 592-00-86
Тел.\факс +375(17) 390-51-86 www.abn.by

Type: **01.08 25 05** External dimensions: **80 x 250 x 52 mm** Weight: **818 g**

DIN rail length in mm	max. fitting length in mm	Earthing rail clamp	Mounting plate (thickness in mm)	External mounting brackets	External hinge* set	EMC version	Internal hinge* set	SWB / SBG / SBGL Corr.protection	Allen lid screws	Silicone lid seal	Sealable lid screws in steel	Turn bolt fastener on request	Quick lock
TS 15													
238	220			•		•		•	•	•	•		•

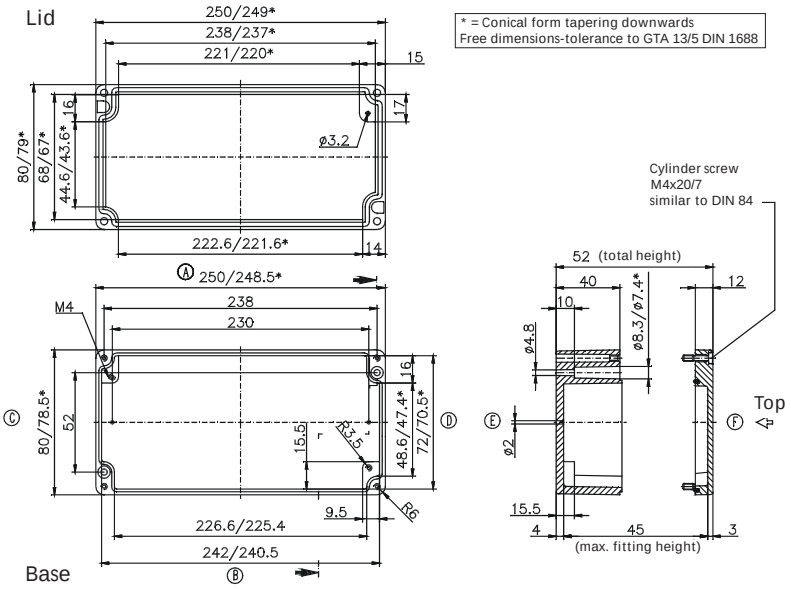

Maximum number of cable glands ***to DIN 50262****

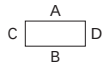

M	Corner dim.	Side A/B	Side C/D	PG	Corner dim.	Side A/B	Side C/D
12	17.25	23	6	7	17.25	22	6
16	25.30	9	2	9	21.85	15	3
20	27.60	8	2	11	25.30	9	2
25	37.95	5	1	13.5	27.60	8	2
32	48.30			16	31.05	6	1
40	60.95			21	37.95	5	1
50	69.00			29	48.30		
63	74.75			36	60.95		
				42	69.00		
				48	74.75		

Type: **01.10 10 08** External dimensions: **100 x 100 x 81 mm** Weight: **800 g**

DIN rail length in mm	max. fitting length in mm	Earthing rail clamp	Mounting plate (thickness in mm)	External mounting brackets	External hinge* set	EMC version	Internal hinge* set	SWB / SBG / SBGL Corr.protection	Allen lid screws	Silicone lid seal	Sealable lid screws in steel	Turn bolt fastener on request	Quick lock
TS 15/35													
87,5	70		1.5	•	•	•		•	•	•	•		•

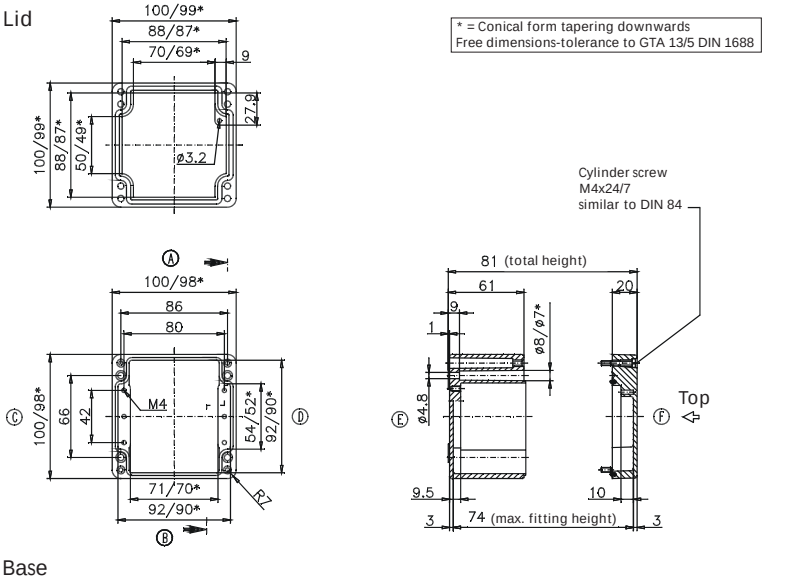

Maximum number of cable glands ***to DIN 50262****

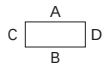

M	Corner dim.	Side A/B	Side C/D	PG	Corner dim.	Side A/B	Side C/D
12	17.25	12	9	7	17.25	12	9
16	25.30	6	4	9	21.85	8	5
20	27.60	5	3	11	25.30	5	4
25	37.95	2	1	13.5	27.60	5	3
32	48.30	1	1	16	31.05	4	2
40	60.95			21	37.95	2	1
50	69.00			29	48.30	1	1
63	74.75			36	60.95		
				42	69.00		
				48	74.75		

* Please quote mounting side

«ЭйБиЭн»
Тел.\факс +375(17) 390-51-85 info@abn.by Тел. +375(44) 592-00-86
Тел.\факс +375(17) 390-51-86 www.abn.by

Type: **01.10 16 08** External dimensions: **100 x 160 x 81 mm** Weight: **870 g**

DIN rail length in mm	max. fitting length in mm	Earthing rail clamp	Mounting plate (thickness in mm)	External mounting brackets	External hinge* set	EMC version	Internal hinge* set	SWB / SBG / SBGL Corr.protection	Allen lid screws	Silicone lid seal	Sealable lid screws in steel	Turn bolt fastener on request	Quick lock
TS 15/35													
148	130		1.5	•	•	•		•	•		•		•

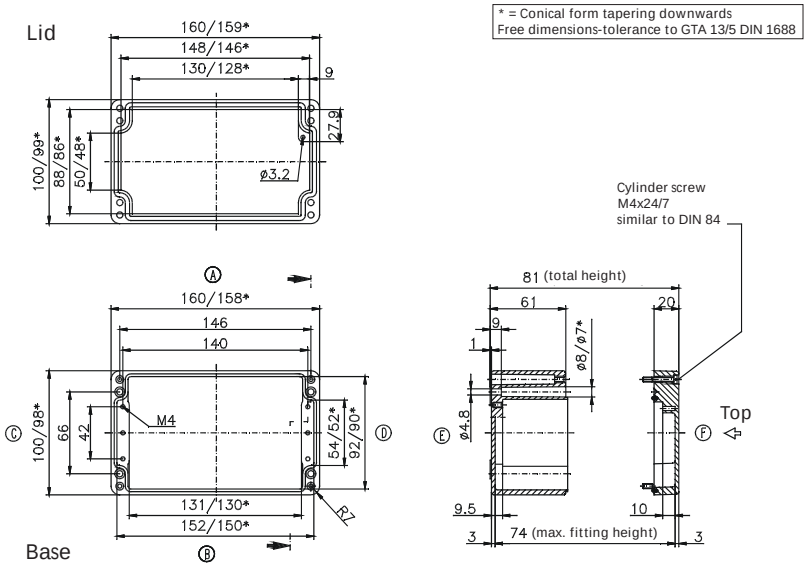

Maximum number of cable glands ***to DIN 50262****

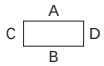

M	Corner dim.	Side A/B	Side C/D	PG	Corner dim.	Side A/B	Side C/D
12	17.25	24	9	7	17.25	22	8
16	25.30	11	4	9	21.85	17	5
20	27.60	10	3	11	25.30	11	4
25	37.95	4	1	13.5	27.60	10	3
32	48.30	3	1	16	31.05	8	2
40	60.95			21	37.95	4	1
50	69.00			29	48.30	3	1
63	74.75			36	60.95		
				42	69.00		
				48	74.75		

Type: **01.10 20 08** External dimensions: **100 x 200 x 81 mm** Weight: **1200 g**

DIN rail length in mm	max. fitting length in mm	Earthing rail clamp	Mounting plate (thickness in mm)	External mounting brackets	External hinge* set	EMC version	Internal hinge* set	SWB / SBG / SBGL Corr.protection	Allen lid screws	Silicone lid seal	Sealable lid screws in steel	Turn bolt fastener on request	Quick lock
TS 15/35													
188	170		1.5	•	•	•		•	•	•	•		•

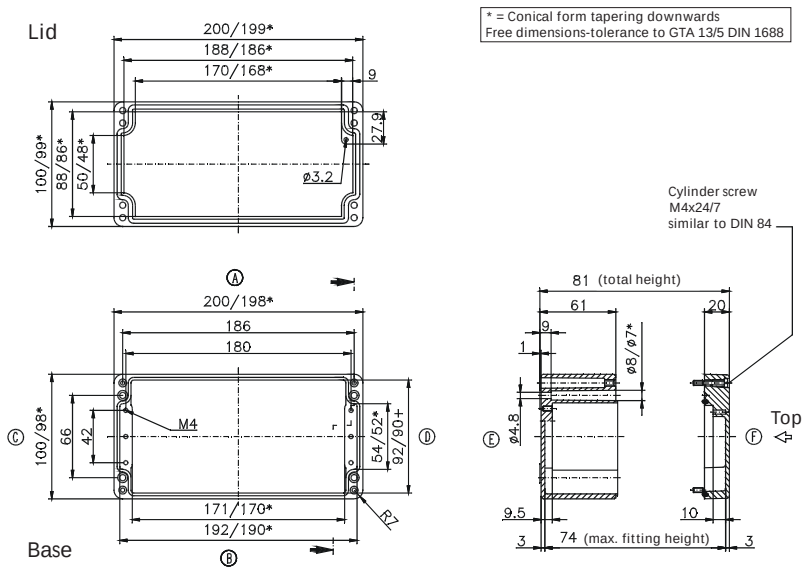

Maximum number of cable glands ***to DIN 50262****

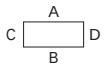

M	Corner dim.	Side A/B	Side C/D	PG	Corner dim.	Side A/B	Side C/D
12	17.25	32	9	7	17.25	30	9
16	25.30	14	4	9	21.85	21	5
20	27.60	12	3	11	25.30	12	4
25	37.95	5	1	13.5	27.60	12	3
32	48.30	3	1	16	31.05	10	2
40	60.95			21	37.95	5	1
50	69.00			29	48.30	3	1
63	74.75			36	60.95		
				42	69.00		
				48	74.75		

* Please quote mounting side

«ЭйБиЭн»
Тел.\факс +375(17) 390-51-85 info@abn.by Тел. +375(44) 592-00-86
Тел.\факс +375(17) 390-51-86 www.abn.by

Type: **01.12 12 08** External dimensions: **120 x 122 x 81 mm** Weight: **1044 g**

DIN rail length in mm	max. fitting length in mm	Earthing rail clamp	Mounting plate (thickness in mm)	External mounting brackets	External hinge* set	EMC version	Internal hinge* set	SWB / SBG / SBGL Corr.protection	Allen lid screws	Silicone lid seal	Sealable lid screws in steel	Turn bolt fastener on request	Quick lock
TS 35													
107	85	5	1.5	•	•	•		•	•	•	•		•

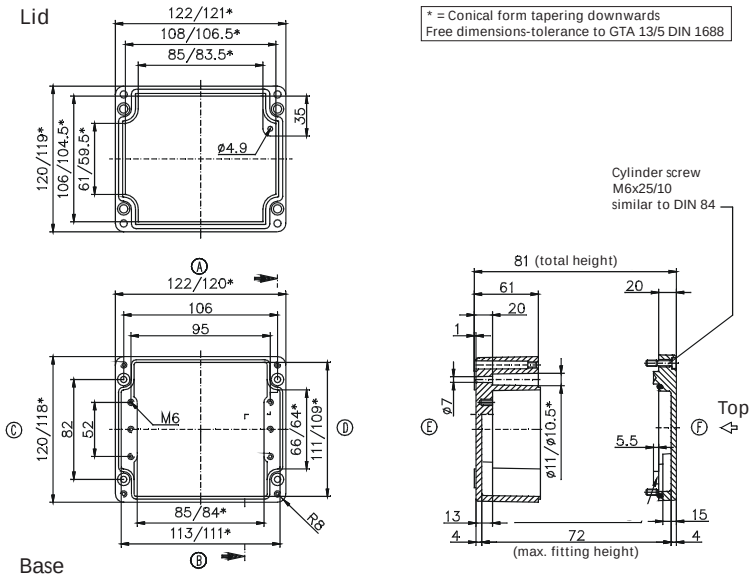

Maximum number of cable glands ***to DIN 50262****

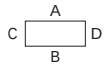

M	Corner dim.	Side A/B	Side C/D	PG	Corner dim.	Side A/B	Side C/D
12	17.25	10	11	7	17.25	10	11
16	25.30	5	5	9	21.85	8	6
20	27.60	4	4	11	25.30	5	4
25	37.95	2	2	13.5	27.60	4	3
32	48.30	1	1	16	31.05	3	2
40	60.95			21	37.95	2	2
50	69.00			29	48.30	2	1
63	74.75			36	60.95		
				42	69.00		
				48	74.75		

Type: **01.12 12 09** External dimensions: **120 x 122 x 91 mm** Weight: **1170 g**

DIN rail length in mm	max. fitting length in mm	Earthing rail clamp	Mounting plate (thickness in mm)	External mounting brackets	External hinge* set	EMC version	Internal hinge* set	SWB / SBG / SBGL Corr.protection	Allen lid screws	Silicone lid seal	Sealable lid screws in steel	Turn bolt fastener on request	Quick lock
TS 35													
107	85	5	1.5	•	•	•		•	•	•	•		•

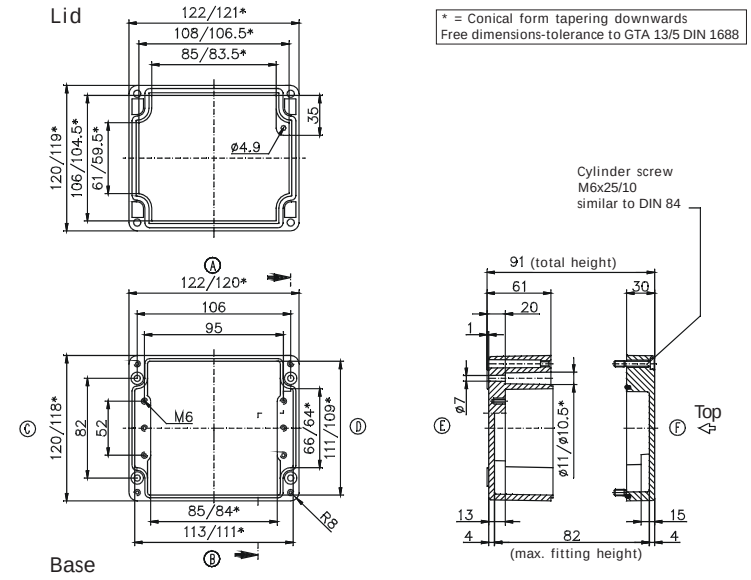

Maximum number of cable glands ***to DIN 50262****

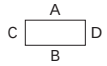

M	Corner dim.	Side A/B	Side C/D	PG	Corner dim.	Side A/B	Side C/D
12	17.25	10	11	7	17.25	10	11
16	25.30	5	5	9	21.85	8	6
20	27.60	4	4	11	25.30	5	4
25	37.95	2	2	13.5	27.60	4	3
32	48.30	1	1	16	31.05	3	2
40	60.95			21	37.95	2	2
50	69.00			29	48.30	1	1
63	74.75			36	60.95		
				42	69.00		
				48	74.75		

* Please quote mounting side

«ЭйБиЭн»
Тел.\факс +375(17) 390-51-85 info@abn.by Тел. +375(44) 592-00-86
Тел.\факс +375(17) 390-51-86 www.abn.by

Type: **01.12 22 08** External dimensions: ***120 x 220 x 81 mm*** Weight: ***1445 g***

DIN rail length in mm	max. fitting length in mm	Earthing rail clamp	Mounting plate (thickness in mm)	External mounting brackets	External hinge* set	EMC version	Internal hinge* set	SWB / SBG / SBGL Corr.protection	Allen lid screws	Silicone lid seal	Sealable lid screws in steel	Turn bolt fastener on request	Quick lock
TS 35													
205	183	13	1.5	•	•	•		•	•	•	•		•

Maximum number of cable glands ***to DIN 50262****

A C D B

M	Corner dim.	Side A/B	Side C/D	PG	Corner dim.	Side A/B	Side C/D
12	17.25	30	11	7	17.25	30	11
16	25.30	12	6	9	21.85	20	6
20	27.60	12	4	11	25.30	12	4
25	37.95	5	2	13.5	27.60	12	4
32	48.30	3	1	16	31.05	10	2
40	60.95			21	37.95	5	2
50	69.00			29	48.30	3	1
63	74.75			36	60.95		
				42	69.00		
				48	74.75		

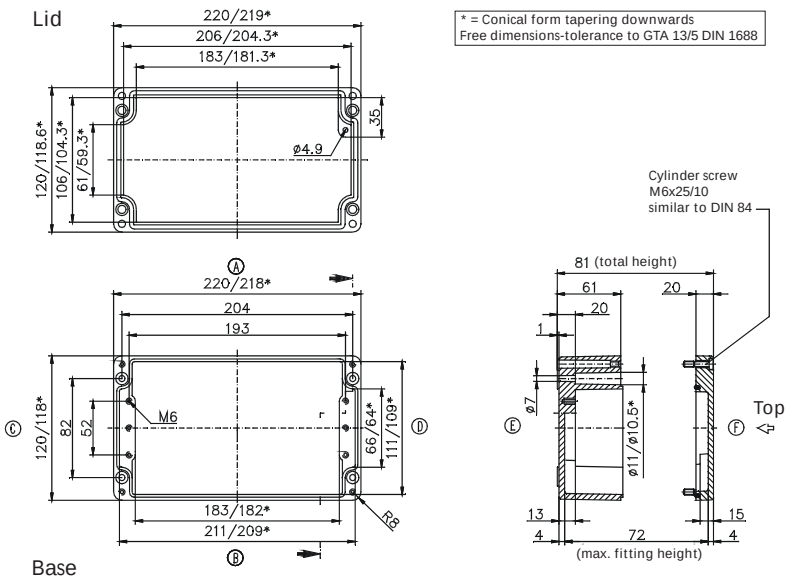

Type: **01.12 22 09** External dimensions: ***120 x 220 x 91 mm*** Weight: ***1800 g***

DIN rail length in mm	max. fitting length in mm	Earthing rail clamp	Mounting plate (thickness in mm)	External mounting brackets	External hinge* set	EMC version	Internal hinge* set	SWB / SBG / SBGL Corr.protection	Allen lid screws	Silicone lid seal	Sealable lid screws in steel	Turn bolt fastener on request	Quick lock
TS 35													
205	183	13	1.5	•	•	•		•	•	•	•		•

Maximum number of cable glands ***to DIN 50262****

A C D B

M	Corner dim.	Side A/B	Side C/D	PG	Corner dim.	Side A/B	Side C/D
12	17.25	34	11	7	17.25	34	11
16	25.30	15	6	9	21.85	24	6
20	27.60	14	4	11	25.30	15	4
25	37.95	6	2	13.5	27.60	14	4
32	48.30	4	1	16	31.05	11	2
40	60.95			21	37.95	6	2
50	69.00			29	48.30	4	1
63	74.75			36	60.95		
				42	69.00		
				48	74.75		

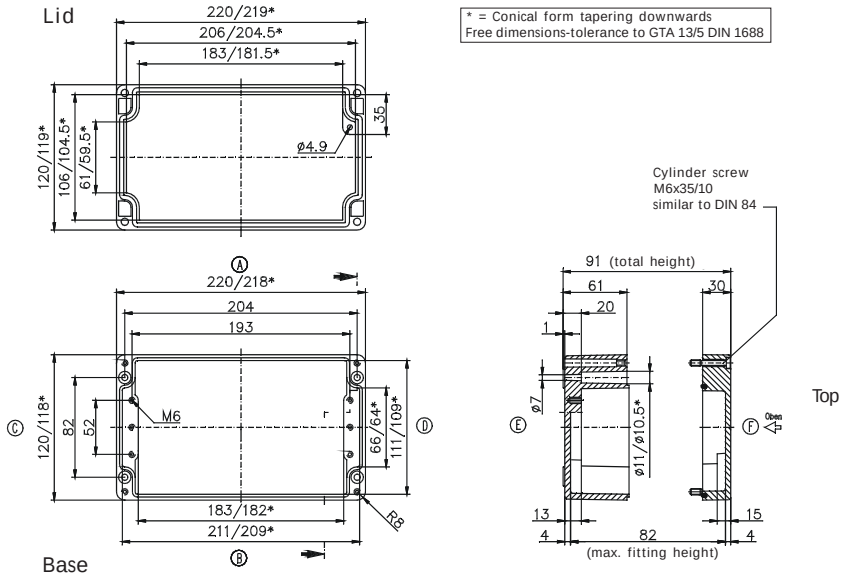

* Please quote mounting side

«ЭйБиЭн»
Тел.\факс +375(17) 390-51-85 info@abn.by Тел. +375(44) 592-00-86
Тел.\факс +375(17) 390-51-86 www.abn.by

Type: **01.12 22 12** External dimensions: **120 x 220 x 118 mm** Weight: **1410 g**

DIN rail length in mm	max. fitting length in mm	Earthing rail clamp	Mounting plate (thickness in mm)	External mounting brackets	External hinge* set	EMC version	Internal hinge* set	SWB / SBG / SBGL Corr.protection	Allen lid screws	Silicone lid seal	Sealable lid screws in steel	Turn bolt fastener on request	Quick lock
TS 35													
208	183	13	1.5	•	•	•		•	•	•	•		•

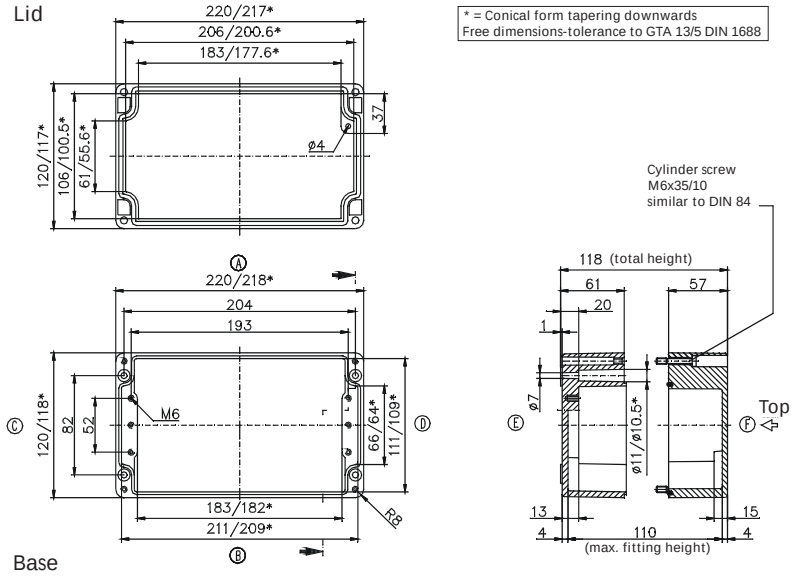

Maximum number of cable glands ***to DIN 50262****

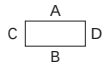

M	Corner dim.	Side A/B	Side C/D	PG	Corner dim.	Side A/B	Side C/D
12	17.25	34	11	7	17.25	34	11
16	25.30	15	6	9	21.85	24	6
20	27.60	14	4	11	25.30	15	4
25	37.95	6	2	13.5	27.60	14	4
32	48.30	4	1	16	31.05	11	2
40	60.95			21	37.95	6	2
50	69.00			29	48.30	4	1
63	74.75			36	60.95		
				42	69.00		
				48	74.75		

Type: **01.12 36 08** External dimensions: **120 x 360 x 81 mm** Weight: **2100 g**

DIN rail length in mm	max. fitting length in mm	Earthing rail clamp	Mounting plate (thickness in mm)	External mounting brackets	External hinge* set	EMC version	Internal hinge* set	SWB / SBG / SBGL Corr.protection	Allen lid screws	Silicone lid seal	Sealable lid screws in steel	Turn bolt fastener on request	Quick lock
TS 35													
343	323	23	1.5	•	•	•		•	•	•	•		•

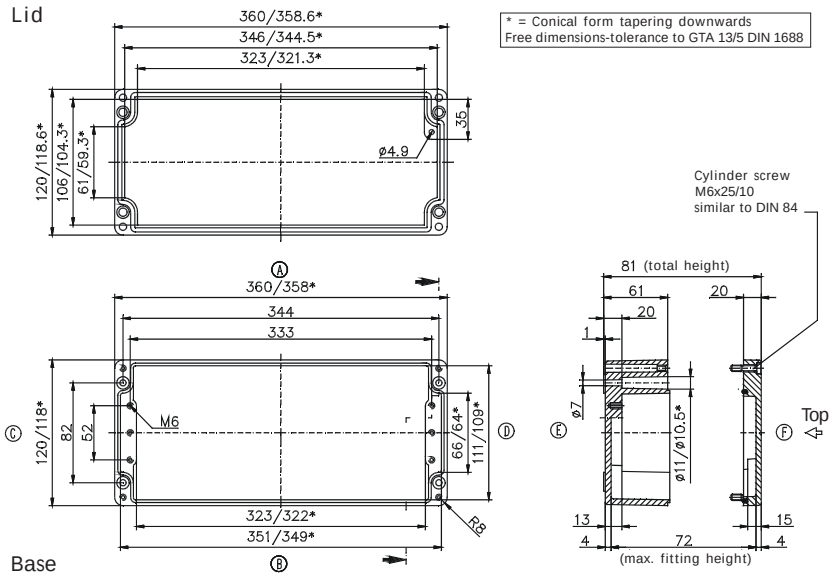

Maximum number of cable glands ***to DIN 50262****

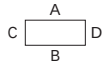

M	Corner dim.	Side A/B	Side C/D	PG	Corner dim.	Side A/B	Side C/D
12	17.25	58	11	7	17.25	58	11
16	25.30	26	5	9	21.85	41	6
20	27.60	24	4	11	25.30	26	4
25	37.95	10	2	13.5	27.60	24	3
32	48.30	7	1	16	31.05	20	2
40	60.95			21	37.95	10	2
50	69.00			29	48.30	7	1
63	74.75			36	60.95		
				42	69.00		
				48	74.75		

* Please quote mounting side

«ЭйБиЭн»
Тел.\факс +375(17) 390-51-85 info@abn.by Тел. +375(44) 592-00-86
Тел.\факс +375(17) 390-51-86 www.abn.by

Type: **01.14 14 09** External dimensions: ***140 x 140 x 91 mm*** Weight: ***1470 g***

DIN rail length in mm	max. fitting length in mm	Earthing rail clamp	Mounting plate (thickness in mm)	External mounting brackets	External hinge* set	EMC version	Internal hinge* set	SWB / SBG / SBGL Corr.protection	Allen lid screws	Silicone lid seal	Sealable lid screws in steel	Turn bolt fastener on request	Quick lock
TS 35													
126	100	6	1.5	•	•	•		•	•	•	•		•

Maximum number of cable glands ***to DIN 50262****

A
C D
B

M	Corner dim.	Side A/B	Side C/D	PG	Corner dim.	Side A/B	Side C/D
12	17.25	18	12	7	17.25	18	12
16	25.30	8	6	9	21.85	12	6
20	27.60	8	4	11	25.30	8	5
25	37.95	3	2	13.5	27.60	8	4
32	48.30	2	1	16	31.05	6	3
40	60.95			21	37.95	3	2
50	69.00			29	48.30	2	1
63	74.75			36	60.95		
				42	69.00		
				48	74.75		

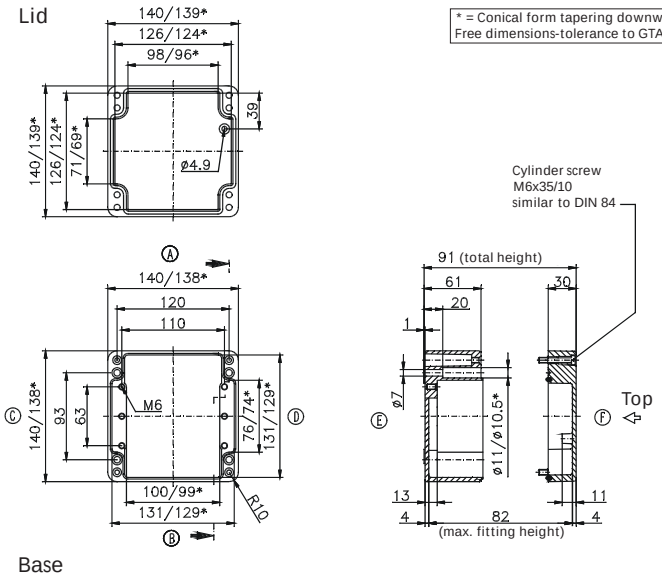

* = Conical form tapering downwards
Free dimensions-tolerance to GTA 13/5 DIN 1688

Type: **01.14 20 09** External dimensions: ***140 x 200 x 91 mm*** Weight: ***1760 g***

DIN rail length in mm	max. fitting length in mm	Earthing rail clamp	Mounting plate (thickness in mm)	External mounting brackets	External hinge* set	EMC version	Internal hinge* set	SWB / SBG / SBGL Corr.protection	Allen lid screws	Silicone lid seal	Sealable lid screws in steel	Turn bolt fastener on request	Quick lock
TS 35													
186	160	12	1.5	•	•	•		•	•	•	•		•

Maximum number of cable glands ***to DIN 50262****

A
C D
B

M	Corner dim.	Side A/B	Side C/D	PG	Corner dim.	Side A/B	Side C/D
12	17.25	28	12	7	17.25	28	12
16	25.30	12	6	9	21.85	20	6
20	27.60	12	4	11	25.30	12	6
25	37.95	5	2	13.5	27.60	12	4
32	48.30	3	1	16	31.05	10	3
40	60.95			21	37.95	5	2
50	69.00			29	48.30	3	1
63	74.75			36	60.95		
				42	69.00		
				48	74.75		

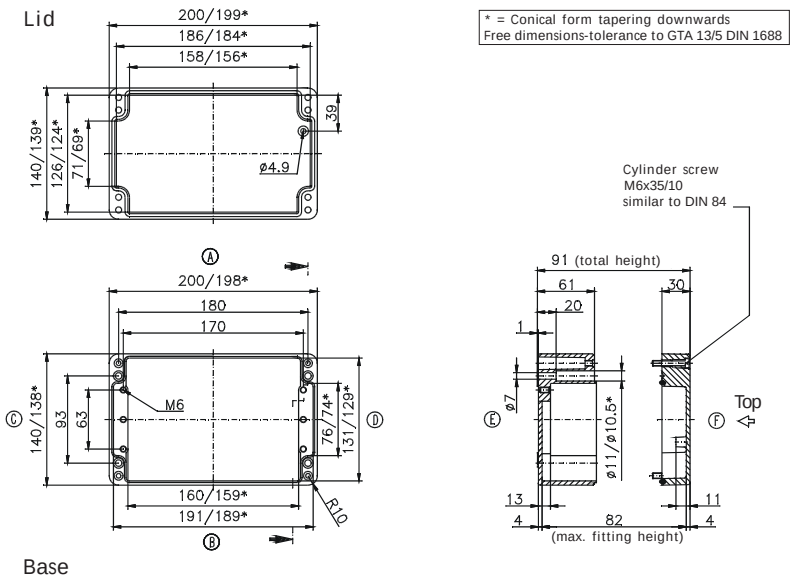

* = Conical form tapering downwards
Free dimensions-tolerance to GTA 13/5 DIN 1688

* Please quote mounting side

«ЭйБиЭн»
Тел.\факс +375(17) 390-51-85 info@abn.by Тел. +375(44) 592-00-86
Тел.\факс +375(17) 390-51-86 www.abn.by

Type: **01.16 16 09** External dimensions: **160 x 160 x 91 mm** Weight: **1760 g**

DIN rail length in mm	max. fitting length in mm	Earthing rail clamp	Mounting plate (thickness in mm)	External mounting brackets	External hinge* set	EMC version	Internal hinge* set	SWB / SBG / SBGL Corr.protection	Allen lid screws	Silicone lid seal	Sealable lid screws in steel	Turn bolt fastener on request	Quick lock
TS 35													
144	120	8	1.5	•	•	•	•	•	•	•	•	•	•

Maximum number of cable glands ***to DIN 50262****

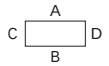

M	Corner dim.	Side A/B	Side C/D	PG	Corner dim.	Side A/B	Side C/D
12	17.25	26	16	7	17.25	26	16
16	25.30	12	8	9	21.85	15	11
20	27.60	9	6	11	25.30	12	6
25	37.95	5	3	13.5	27.60	9	6
32	48.30	3	2	16	31.05	8	5
40	60.95	2	1	21	37.95	5	3
50	69.00	2		29	48.30	2	2
63	74.75			36	60.95	2	1
				42	69.00	1	
				48	74.75		

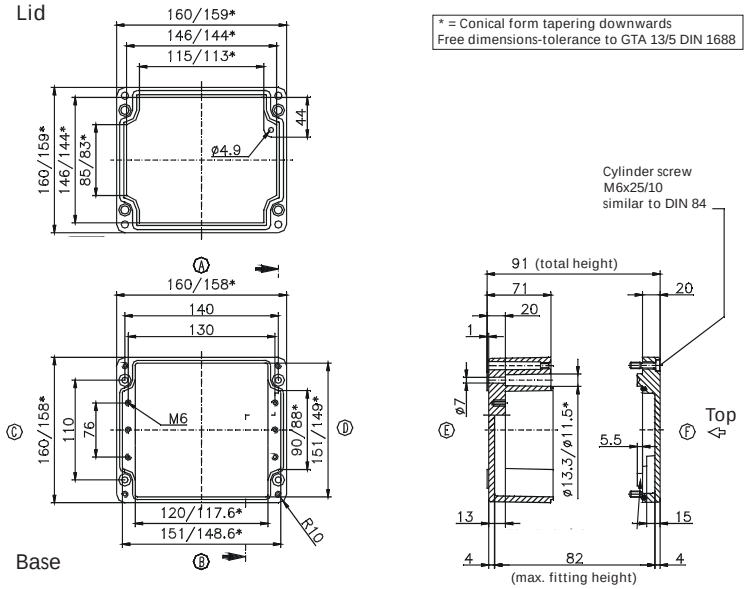

Type: **01.16 26 09** External dimensions: **160 x 260 x 91 mm** Weight: **2300 g**

DIN rail length in mm	max. fitting length in mm	Earthing rail clamp	Mounting plate (thickness in mm)	External mounting brackets	External hinge* set	EMC version	Internal hinge* set	SWB / SBG / SBGL Corr.protection	Allen lid screws	Silicone lid seal	Sealable lid screws in steel	Turn bolt fastener on request	Quick lock
TS 35													
245	220	16	1.5	•	•	•	•	•	•	•	•	•	•

Maximum number of cable glands ***to DIN 50262****

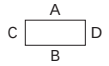

M	Corner dim.	Side A/B	Side C/D	PG	Corner dim.	Side A/B	Side C/D
12	17.25	50	16	7	17.25	50	16
16	25.30	24	8	9	21.85	30	11
20	27.60	17	6	11	25.30	23	6
25	37.95	10	3	13.5	27.60	17	6
32	48.30	5	2	16	31.05	14	5
40	60.95	3	1	21	37.95	9	3
50	69.00	3		29	48.30	5	2
63	74.75			36	60.95	3	1
				42	69.00	3	
				48	74.75		

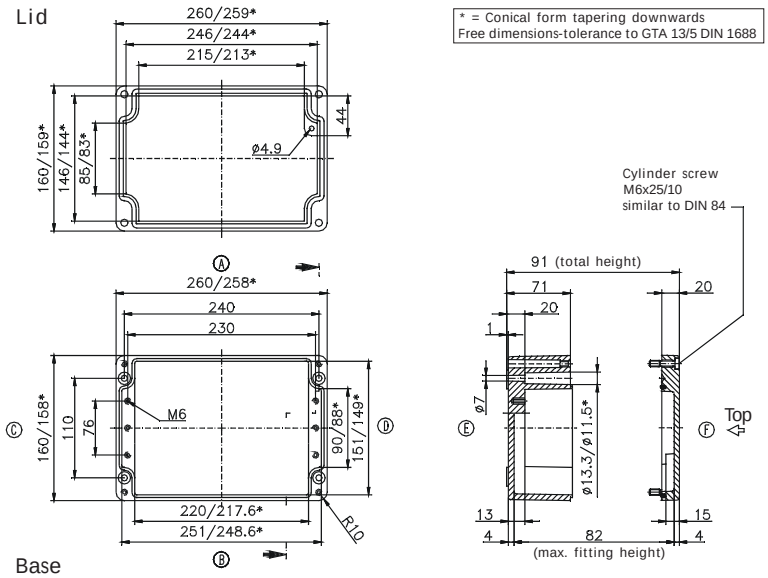

* Please quote mounting side

«ЭйБиЭн»
Тел.\факс +375(17) 390-51-85 info@abn.by Тел. +375(44) 592-00-86
Тел.\факс +375(17) 390-51-86 www.abn.by

Type: **01.16 36 09** External dimensions: ***160 x 360 x 91 mm*** Weight: ***2940 g***

DIN rail length in mm	max. fitting length in mm	Earthing rail clamp	Mounting plate (thickness in mm)	External mounting brackets	External hinge* set	EMC version	Internal hinge* set	SWB / SBG / SBGL Corr.protection	Allen lid screws	Silicone lid seal	Sealable lid screws in steel	Turn bolt fastener on request	Quick lock
TS 35													
343	320	23	1.5	•	•	•	•	•	•	•	•	•	•

Maximum number of cable glands ***to DIN 50262****

A C D B

M	Corner dim.	Side A/B	Side C/D	*PG*	Corner dim.	Side A/B	Side C/D
12	17.25	72	16	7	17.25	72	16
16	25.30	36	8	9	21.85	42	11
20	27.60	24	6	11	25.30	33	6
25	37.95	15	3	13.5	27.60	24	6
32	48.30	7	2	16	31.05	20	5
40	60.95	5	1	21	37.95	14	3
50	69.00	4		29	48.30	7	2
63	74.75			36	60.95	5	1
				42	69.00	4	
				48	74.75		

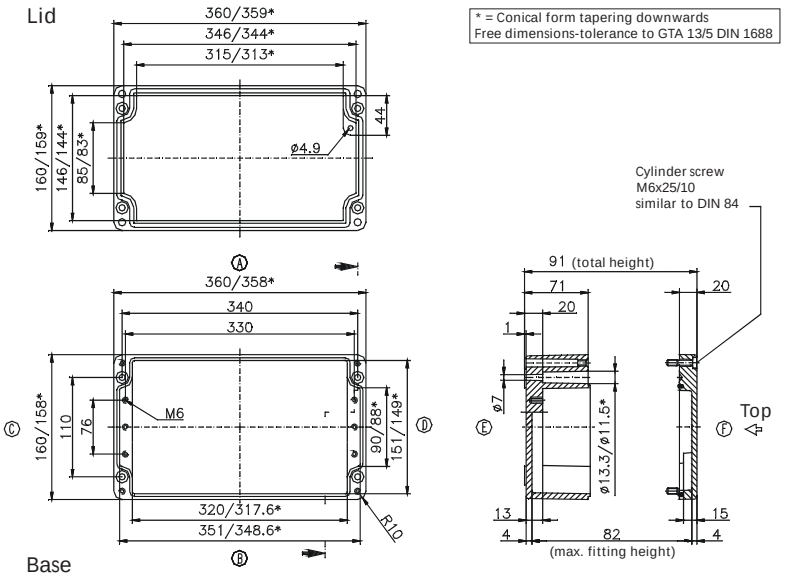

Type: **01.16 56 09** External dimensions: ***160 x 560 x 91 mm*** Weight: ***4457 g***

DIN rail length in mm	max. fitting length in mm	Earthing rail clamp	Mounting plate (thickness in mm)	External mounting brackets	External hinge* set	EMC version	Internal hinge* set	SWB / SBG / SBGL Corr.protection	Allen lid screws	Silicone lid seal	Sealable lid screws in steel	Turn bolt fastener on request	Quick lock
TS 35													
543	520	38	2	•	•	•	•	•	•	•	•	•	•

Maximum number of cable glands ***to DIN 50262****

A C D B

M	Corner dim.	Side A/B	Side C/D	*PG*	Corner dim.	Side A/B	Side C/D
12	17.25	104	16	7	17.25	104	16
16	25.30	58	8	9	21.85	66	11
20	27.60	40	62	11	25.30	58	6
25	37.95	24	3	13.5	27.60	40	6
32	48.30	12	2	16	31.05	32	5
40	60.95	8	1	21	37.95	24	3
50	69.00	6		29	48.30	12	2
63	74.75			36	60.95	8	1
				42	69.00	6	
				48	74.75		

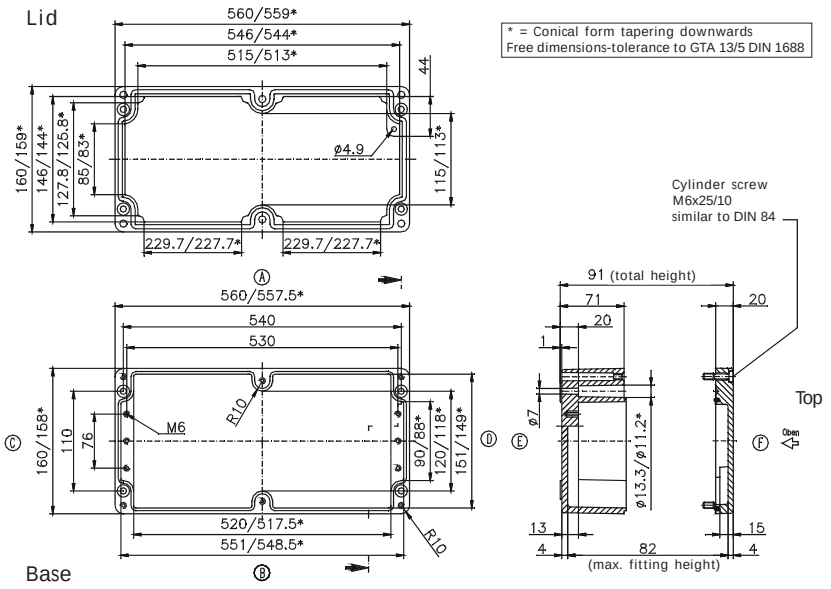

* Please quote mounting side

«ЭйБиЭн»
Тел.\факс +375(17) 390-51-85 info@abn.by Тел. +375(44) 592-00-86
Тел.\факс +375(17) 390-51-86 www.abn.by

Type: **01.18 18 10** External dimensions: **180 x 180 x 101 mm** Weight: **2400 g**

DIN rail length in mm	max. fitting length in mm	Earthing rail clamp	Mounting plate (thickness in mm)	External mounting brackets	External hinge* set	EMC version	Internal hinge* set	SWB / SBG / SBGL Corr.protection	Allen lid screws	Silicone lid seal	Sealable lid screws in steel	Turn bolt fastener on request	Quick lock
TS 35													
166	140	8	1.5	•	•	•	•	•	•	•	•	•	•

Maximum number of cable glands ***to DIN 50262****

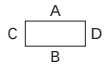

M	Corner dim.	Side A/B	Side C/D	PG	Corner dim.	Side A/B	Side C/D
12	17.25	30	20	7	17.25	28	20
16	25.30	15	9	9	21.85	18	14
20	27.60	11	8	11	25.30	15	8
25	37.95	6	3	13.5	27.60	11	8
32	48.30	3	2	16	31.05	8	6
40	60.95	2	2	21	37.95	6	3
50	69.00	2		29	48.30	3	2
63	74.75			36	60.95	2	2
				42	69.00	2	
				48	74.75		

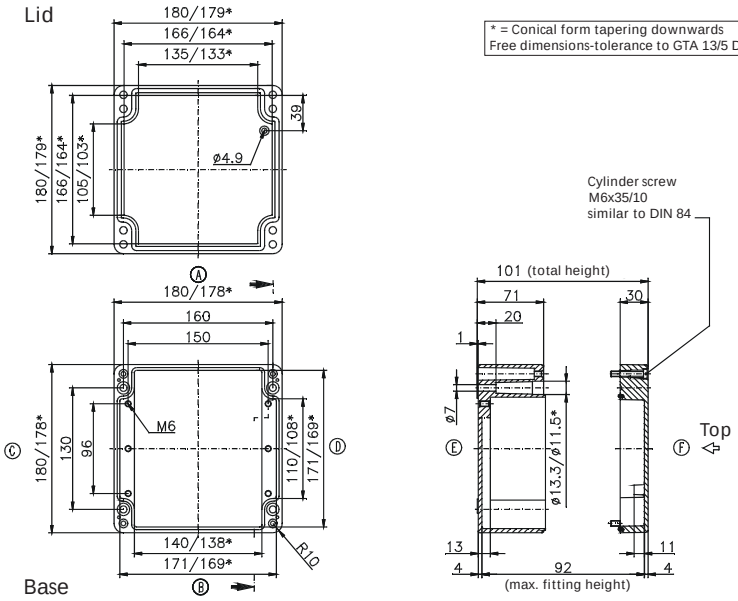

Type: **01.18 28 10** External dimensions: **180 x 280 x 101 mm** Weight: **3000 g**

DIN rail length in mm	max. fitting length in mm	Earthing rail clamp	Mounting plate (thickness in mm)	External mounting brackets	External hinge* set	EMC version	Internal hinge* set	SWB / SBG / SBGL Corr.protection	Allen lid screws	Silicone lid seal	Sealable lid screws in steel	Turn bolt fastener on request	Quick lock
TS 35													
264	240	16	1.5	•	•	•	•	•	•	•	•	•	•

Maximum number of cable glands ***to DIN 50262****

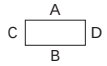

M	Corner dim.	Side A/B	Side C/D	PG	Corner dim.	Side A/B	Side C/D
12	17.25	52	22	7	17.25	52	22
16	25.30	26	10	9	21.85	33	15
20	27.60	18	8	11	25.30	23	10
25	37.95	11	4	13.5	27.60	18	8
32	48.30	5	2	16	31.05	14	7
40	60.95	4	2	21	37.95	10	4
50	69.00	3		29	48.30	5	2
63	74.75			36	60.95	4	2
				42	69.00	3	
				48	74.75		

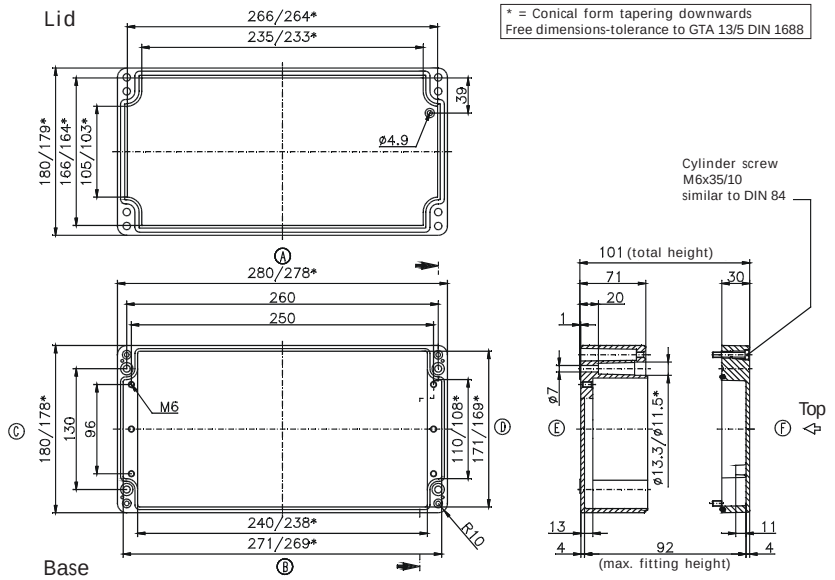

* Please quote mounting side

«ЭйБиЭн»
Тел.\факс +375(17) 390-51-85 info@abn.by Тел. +375(44) 592-00-86
Тел.\факс +375(17) 390-51-86 www.abn.by

Type: **01.23 10 11** External dimensions: ***230 x 100 x 111 mm*** Weight: ***2300 g***

DIN rail length in mm	max. fitting length in mm	Earthing rail clamp	Mounting plate (thickness in mm)	External mounting brackets	External hinge* set	EMC version	Internal hinge* set	SWB / SBG / SBGL Corr.protection	Allen lid screws	Silicone lid seal	Sealable lid screws in steel	Turn bolt fastener on request	Quick lock
TS 35													
214	190		1.5	•	•	•	•	•	•	•	•	•	•

Maximum number of cable glands ***to DIN 50262****

A C D B

M	Corner dim.	Side A/B	Side C/D	PG	Corner dim.	Side A/B	Side C/D
12	17.25	15	45	7	17.25	15	45
16	25.30	8	18	9	21.85	10	28
20	27.60	6	17	11	25.30	6	18
25	37.95	3	8	13.5	27.60	6	17
32	48.30	2	5	16	31.05	5	12
40	60.95	1	3	21	37.95	3	8
50	69.00	1	2	29	48.30	1	4
63	74.75		2	36	60.95	1	3
				42	69.00	1	2
				48	74.75	1	2

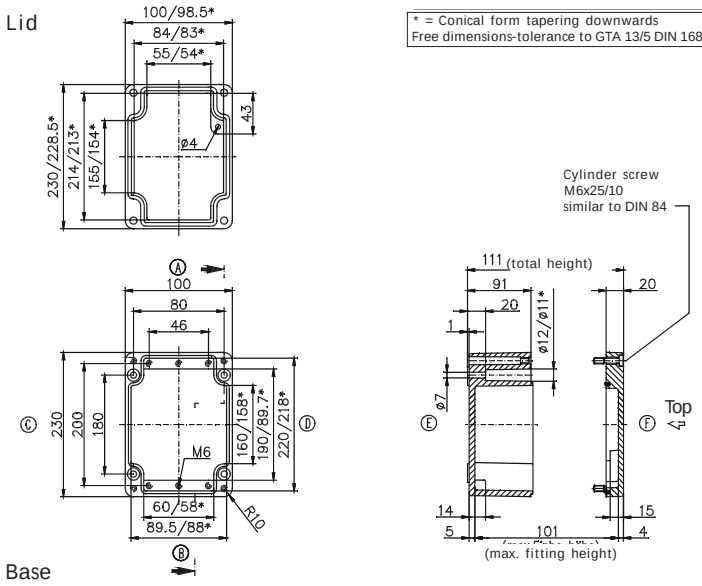

* = Conical form tapering downwards
Free dimensions-tolerance to GTA 13/5 DIN 1688

Type: **01.23 20 11** External dimensions: ***232 x 202 x 111 mm*** Weight: ***2880 g***

DIN rail length in mm	max. fitting length in mm	Earthing rail clamp	Mounting plate (thickness in mm)	External mounting brackets	External hinge* set	EMC version	Internal hinge* set	SWB / SBG / SBGL Corr.protection	Allen lid screws	Silicone lid seal	Sealable lid screws in steel	Turn bolt fastener on request	Quick lock
TS 35													
186	160	12	1.5	•	•	•	•	•	•	•	•	•	•

Maximum number of cable glands ***to DIN 50262****

A C D B

M	Cor-ner dim.	Side A/B	Side C/D	PG	Cor-ner dim.	Side A/B	Side C/D
12	17.25	45	45	7	17.25	45	45
16	25.30	22	18	9	21.85	28	28
20	27.60	18	17	11	25.30	20	18
25	37.95	8	8	13.5	27.60	18	17
32	48.30	6	5	16	31.05	15	12
40	60.95	3	3	21	37.95	8	8
50	69.00	2	2	29	48.30	5	4
63	74.75	2	2	36	60.95	3	3
				42	69.00	2	2
				48	74.75	2	2

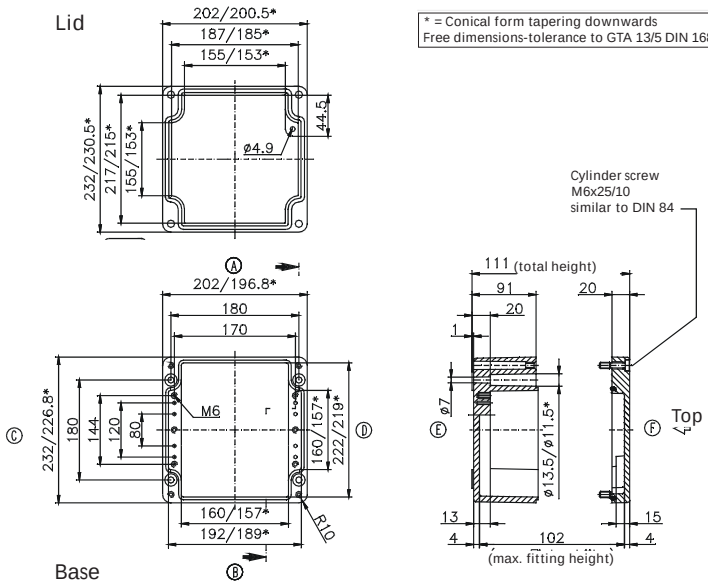

* = Conical form tapering downwards
Free dimensions-tolerance to GTA 13/5 DIN 1688

* Please quote mounting side

«ЭйБиЭн»
Тел.\факс +375(17) 390-51-85 info@abn.by Тел. +375(44) 592-00-86
Тел.\факс +375(17) 390-51-86 www.abn.by

Type: **01.23 20 18** External dimensions: ***232 x 202 x 181 mm*** Weight: ***4600 g***

DIN rail length in mm	max. fitting length in mm	Earthing rail clamp	Mounting plate (thickness in mm)	External mounting brackets	External hinge* set	EMC version	Internal hinge* set	SWB / SBG / SBGL Corr.protection	Allen lid screws	Silicone lid seal	Sealable lid screws in steel	Turn bolt fastener on request	Quick lock
TS 35													
186	160	12	1.5	•	•	•	•	•	•	•	•	•	•

Maximum number of cable glands ***to DIN 50262****

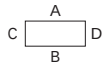

M	Corner dim.	Side A/B	Side C/D	PG	Corner dim.	Side A/B	Side C/D
12	17.25	90	81	7	17.25	90	81
16	25.30	42	36	9	21.85	56	49
20	27.60	33	33	11	25.30	42	36
25	37.95	18	16	13.5	27.60	33	33
32	48.30	10	9	16	31.05	25	25
40	60.95	6	6	21	37.95	16	16
50	69.00	5	5	29	48.30	10	9
63	74.75	4	4	36	60.95	6	5
				42	69.00	5	4
				48	74.75	4	4

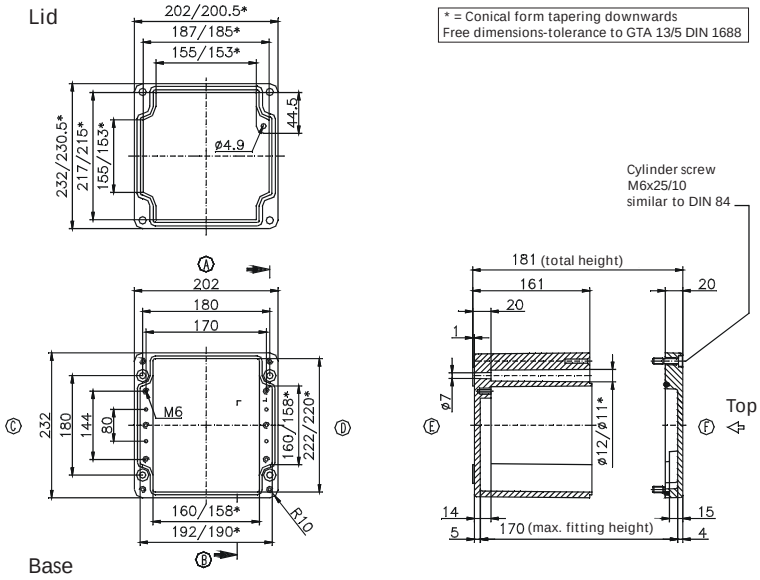

Type: **01.23 28 11** External dimensions: ***230 x 280 x 111 mm*** Weight: ***3460 g***

DIN rail length in mm	max. fitting length in mm	Earthing rail clamp	Mounting plate (thickness in mm)	External mounting brackets	External hinge* set	EMC version	Internal hinge* set	SWB / SBG / SBGL Corr.protection	Allen lid screws	Silicone lid seal	Sealable lid screws in steel	Turn bolt fastener on request	Quick lock
TS 35													
264	240	16	1.5	•	•	•	•	•	•	•	•	•	•

Maximum number of cable glands ***to DIN 50262****

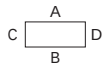

M	Corner dim.	Side A/B	Side C/D	PG	Corner dim.	Side A/B	Side C/D
12	17.25	70	45	7	17.25	68	45
16	25.30	32	18	9	21.85	44	28
20	27.60	24	17	11	25.30	32	18
25	37.95	12	8	13.5	27.60	24	17
32	48.30	9	5	16	31.05	21	12
40	60.95	4	3	21	37.95	12	8
50	69.00	3	2	29	48.30	9	4
63	74.75	3	2	36	60.95	4	3
				42	69.00	3	2
				48	74.75	3	2

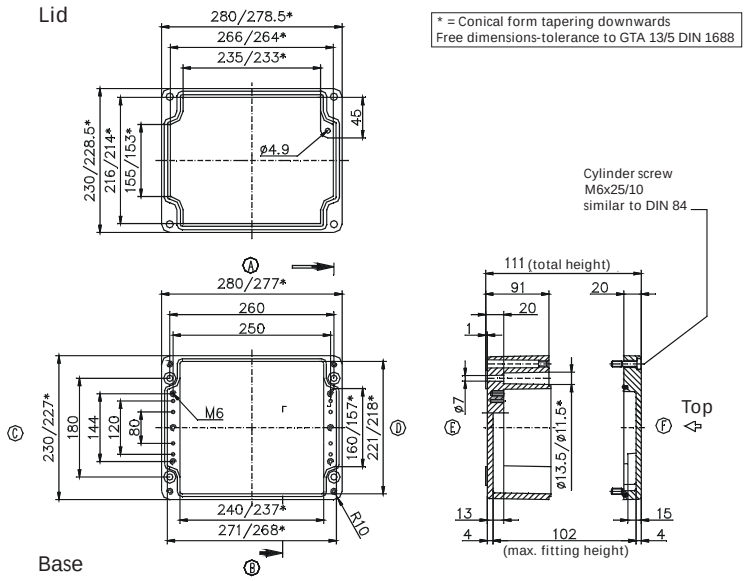

* Please quote mounting side

«ЭйБиЭн»
Тел.\факс +375(17) 390-51-85 info@abn.by Тел. +375(44) 592-00-86
Тел.\факс +375(17) 390-51-86 www.abn.by

Type: **01.23 33 11** External dimensions: **230 x 330 x 111 mm** Weight: **3500 g**

DIN rail length in mm	max. fitting length in mm	Earthing rail clamp	Mounting plate (thickness in mm)	External mounting brackets	External hinge* set	EMC version	Internal hinge* set	SWB / SBG / SBGL Corr.protection	Allen lid screws	Silicone lid seal	Sealable lid screws in steel	Turn bolt fastener on request	Quick lock
TS 35													
314	290	21	1.5	•	•	•	•	•	•	•	•	•	•

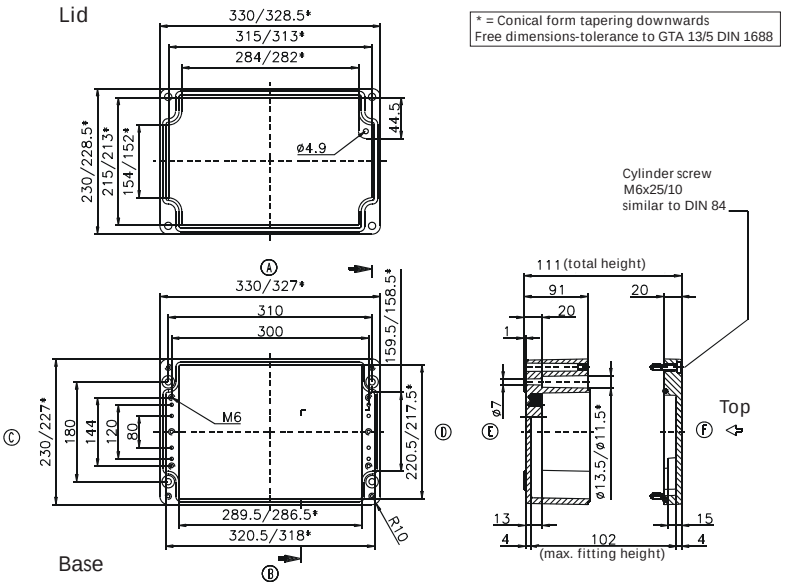

Maximum number of cable glands ***to DIN 50262****

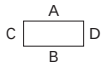

M	Corner dim.	Side A/B	Side C/D	PG	Corner dim.	Side A/B	Side C/D
12	17.25	84	45	7	17.25	81	45
16	25.30	42	18	9	21.85	52	28
20	27.60	30	17	11	25.30	38	18
25	37.95	15	8	13.5	27.60	30	17
32	48.30	11	5	16	31.05	27	12
40	60.95	5	3	21	37.95	15	8
50	69.00	4	2	29	48.30	11	4
63	74.75	4	2	36	60.95	5	3
				42	69.00	4	2
				48	74.75	4	2

Type: **01.23 33 18** External dimensions: **230 x 330 x 181 mm** Weight: **6400 g**

DIN rail length in mm	max. fitting length in mm	Earthing rail clamp	Mounting plate (thickness in mm)	External mounting brackets	External hinge* set	EMC version	Internal hinge* set	SWB / SBG / SBGL Corr.protection	Allen lid screws	Silicone lid seal	Sealable lid screws in steel	Turn bolt fastener on request	Quick lock
TS 35													
314	290	21	1.5	•	•	•	•	•	•	•	•	•	•

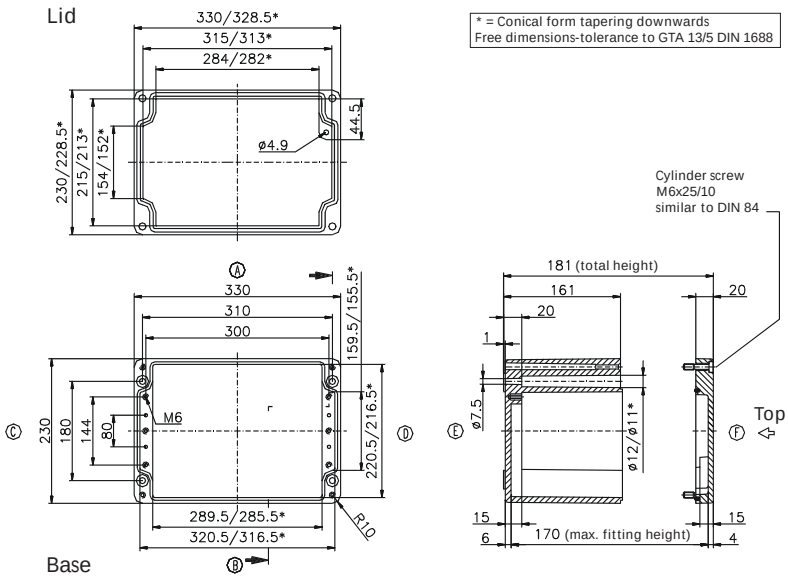

Maximum number of cable glands ***to DIN 50262****

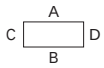

M	Corner dim.	Side A/B	Side C/D	PG	Corner dim.	Side A/B	Side C/D
12	17.25	165	81	7	17.25	144	81
16	25.30	77	36	9	21.85	104	49
20	27.60	60	33	11	25.30	77	36
25	37.95	30	16	13.5	27.60	60	33
32	48.30	18	9	16	31.05	45	25
40	60.95	11	6	21	37.95	30	16
50	69.00	8	5	29	48.30	18	9
63	74.75	8	4	36	60.95	11	5
				42	69.00	8	4
				48	74.75	8	4

* Please quote mounting side

«ЭйБиЭн»
Тел.\факс +375(17) 390-51-85 info@abn.by Тел. +375(44) 592-00-86
Тел.\факс +375(17) 390-51-86 www.abn.by

Type: **01.23 40 11** External dimensions: **230 x 400 x 111 mm** Weight: **4833 g**

DIN rail length in mm	max. fitting length in mm	Earthing rail clamp	Mounting plate (thickness in mm)	External mounting brackets	External hinge* set	EMC version	Internal hinge* set	SWB / SBG / SBGL Corr.protection	Allen lid screws	Silicone lid seal	Sealable lid screws in steel	Turn bolt fastener on request	Quick lock
TS 35													
381	360	26	2	•	•	•	•	•	•	•	•	•	•

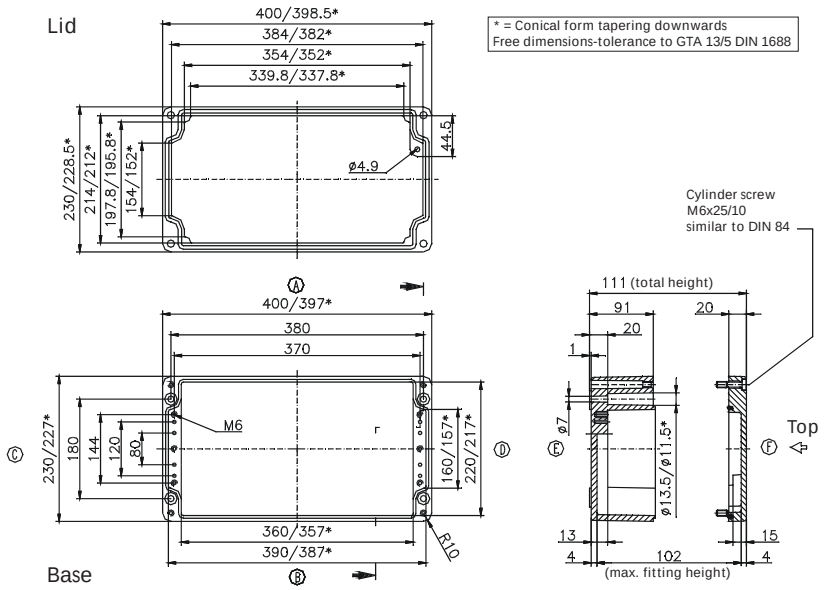

Maximum number of cable glands ***to DIN 50262****

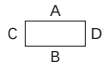

M	Corner dim.	Side A/B	Side C/D	PG	Corner dim.	Side A/B	Side C/D
12	17.25	103	45	7	17.25	103	45
16	25.30	50	18	9	21.85	64	28
20	27.60	39	17	11	25.30	46	18
25	37.95	20	8	13.5	27.60	39	17
32	48.30	14	5	16	31.05	33	12
40	60.95	6	3	21	37.95	18	8
50	69.00	5	2	29	48.30	13	4
63	74.75	5	2	36	60.95	6	3
				42	69.00	5	2
				48	74.75	5	2

Type: **01.23 40 23** External dimensions: **230 x 400 x 225 mm** Weight: **8300 g**

DIN rail length in mm	max. fitting length in mm	Earthing rail clamp	Mounting plate (thickness in mm)	External mounting brackets	External hinge* set	EMC version	Internal hinge* set	SWB / SBG / SBGL Corr.protection	Allen lid screws	Silicone lid seal	Sealable lid screws in steel	Turn bolt fastener on request	Quick lock
TS 35													
381	360	26	2	•	•	•	•	•	•	•	•	•	•

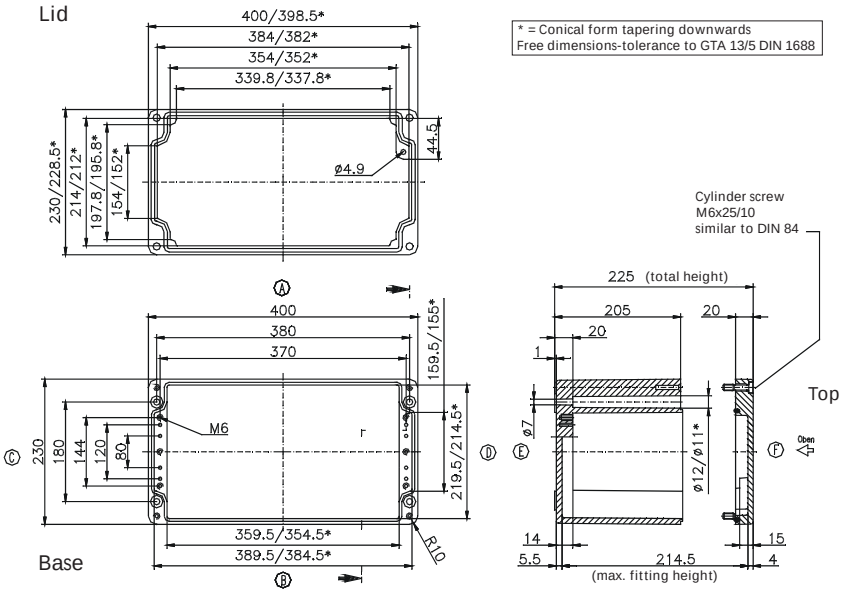

Maximum number of cable glands ***to DIN 50262****

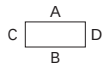

M	Corner dim.	Side A/B	Side C/D	PG	Corner dim.	Side A/B	Side C/D
12	17.25	240	108	7	17.25	240	108
16	25.30	122	48	9	21.85	160	63
20	27.60	100	44	11	25.30	112	48
25	37.95	54	21	13.5	27.60	100	44
32	48.30	30	13	16	31.05	77	35
40	60.95	18	9	21	37.95	54	21
50	69.00	15	6	29	48.30	30	13
63	74.75	12	5	36	60.95	18	6
				42	69.00	15	6
				48	74.75	12	5

* Please quote mounting side

«ЭйБиЭн»
Тел.\факс +375(17) 390-51-85 info@abn.by Тел. +375(44) 592-00-86
Тел.\факс +375(17) 390-51-86 www.abn.by

Type: **01.23 60 11** External dimensions: **230 x 600 x 111 mm** Weight: **8700 g**

DIN rail length in mm	max. fitting length in mm	Earthing rail clamp	Mounting plate (thickness in mm)	External mounting brackets	External hinge* set	EMC version	Internal hinge* set	SWB / SBG / SBGL Corr.protection	Allen lid screws	Silicone lid seal	Sealable lid screws in steel	Turn bolt fastener on request	Quick lock
TS 35													
581	560	41	2	•	•	•	•	•	•	•	•	•	•

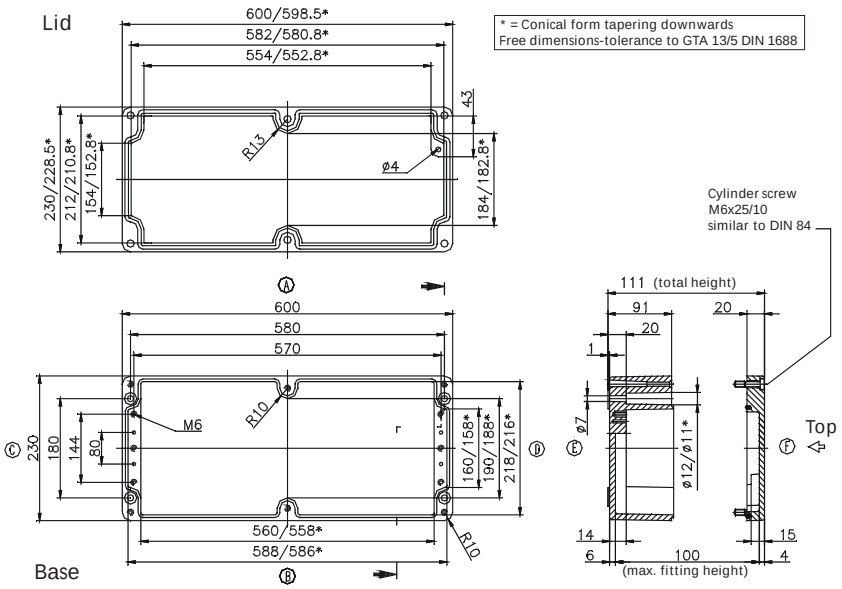

Maximum number of cable glands ***to DIN 50262****

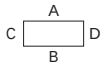

M	Corner dim.	Side A/B	Side C/D	PG	Corner dim.	Side A/B	Side C/D
12	17.25	150	43	7	17.25	150	43
16	25.30	72	18	9	21.85	96	28
20	27.60	54	17	11	25.30	68	18
25	37.95	28	8	13.5	27.60	54	15
32	48.30	20	4	16	31.05	28	12
40	60.95	10	3	21	37.95	28	8
50	69.00	8	2	29	48.30	20	4
63	74.75	6	2	36	60.95	10	2
				42	69.00	8	2
				48	74.75	6	2

Type: **01.31 40 11** External dimensions: **313 x 404 x 111 mm** Weight: **6400 g**

DIN rail length in mm	max. fitting length in mm	Earthing rail clamp	Mounting plate (thickness in mm)	External mounting brackets	External hinge* set	EMC version	Internal hinge* set	SWB / SBG / SBGL Corr.protection	Allen lid screws	Silicone lid seal	Sealable lid screws in steel	Turn bolt fastener on request	Quick lock
TS 35													
381	360	26	2	•	•	•	•	•	•	•	•	•	•

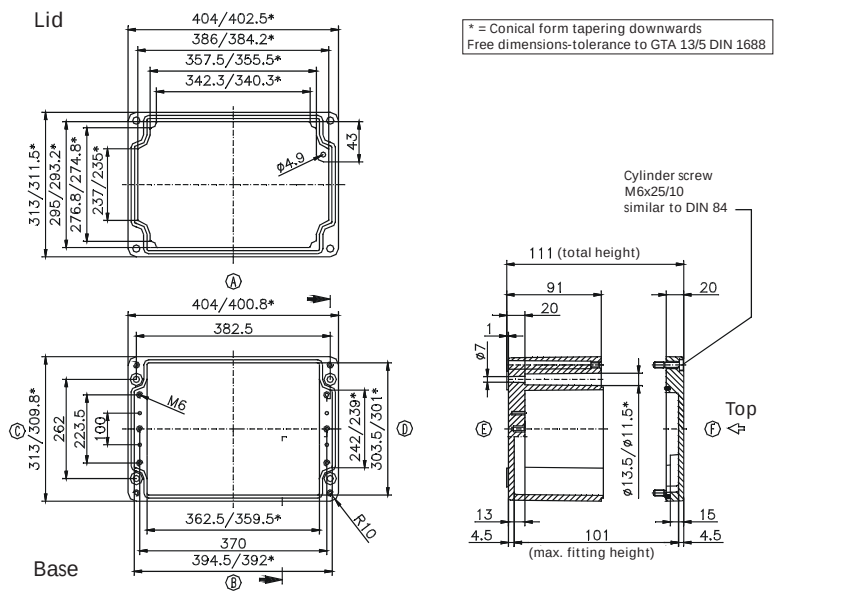

Maximum number of cable glands ***to DIN 50262****

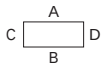

M	Corner dim.	Side A/B	Side C/D	PG	Corner dim.	Side A/B	Side C/D
12	17.25	105	68	7	17.25	103	68
16	25.30	50	28	9	21.85	64	42
20	27.60	39	26	11	25.30	46	27
25	37.95	20	12	13.5	27.60	39	24
32	48.30	14	7	16	31.05	33	18
40	60.95	6	4	21	37.95	18	12
50	69.00	5	3	29	48.30	13	7
63	74.75	5	3	36	60.95	6	4
				42	69.00	5	3
				48	74.75	5	3

* Please quote mounting side

«ЭйБиЭн»
Тел.\факс +375(17) 390-51-85 info@abn.by Тел. +375(44) 592-00-86
Тел.\факс +375(17) 390-51-86 www.abn.by

Type: **01.31 40 14** External dimensions: ***312 x 403 x 141 mm*** Weight: ***9500 g***

DIN rail length in mm	max. fitting length in mm	Earthing rail clamp	Mounting plate (thickness in mm)	External mounting brackets	External hinge* set	EMC version	Internal hinge* set	SWB / SBG / SBGL Corr.protection	Allen lid screws	Silicone lid seal	Sealable lid screws in steel	Turn bolt fastener on request	Quick lock
TS 35													
381	360	26	2	•	•	•	•	•	•	•	•	•	•

Maximum number of cable glands ***to DIN 50262****

A
C D
B

M	Corner dim.	Side A/B	Side C/D	PG	Corner dim.	Side A/B	Side C/D
12	17.25	147	95	7	17.25	147	95
16	25.30	70	43	9	21.85	96	55
20	27.60	55	32	11	25.30	70	40
25	37.95	28	18	13.5	27.60	55	32
32	48.30	17	10	16	31.05	44	28
40	60.95	12	7	21	37.95	27	18
50	69.00	7	4	29	48.30	17	10
63	74.75	6	3	36	60.95	12	7
				42	69,00	7	4
				48	74,75	6	3

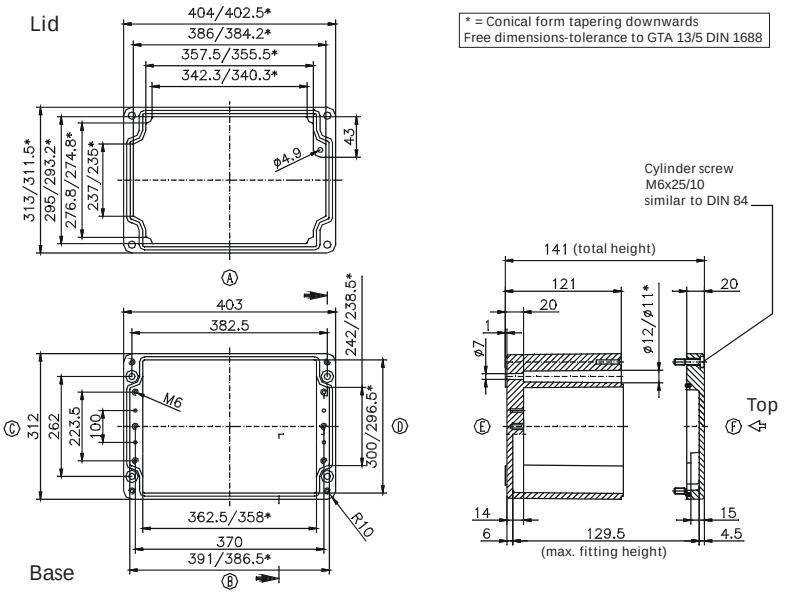

Type: **01.31 40 18** External dimensions: ***313 x 404 x 181 mm*** Weight: ***9780 g***

DIN rail length in mm	max. fitting length in mm	Earthing rail clamp	Mounting plate (thickness in mm)	External mounting brackets	External hinge* set	EMC version	Internal hinge* set	SWB / SBG / SBGL Corr.protection	Allen lid screws	Silicone lid seal	Sealable lid screws in steel	Turn bolt fastener on request	Quick lock
TS 35													
381	360	26	2	•	•	•	•	•	•	•	•	•	•

Maximum number of cable glands ***to DIN 50262****

A
C D
B

M	Corner dim.	Side A/B	Side C/D	PG	Corner dim.	Side A/B	Side C/D
12	17.25	205	122	7	17.25	205	122
16	25.30	98	54	9	21.85	128	77
20	27.60	78	51	11	25.30	98	54
25	37.95	40	24	13.5	27.60	75	48
32	48.30	22	15	16	31.05	60	38
40	60.95	15	9	21	37.95	38	24
50	69.00	11	6	29	48.30	22	15
63	74.75	8	6	36	60.95	14	8
				42	69.00	10	6
				48	74.75	10	6

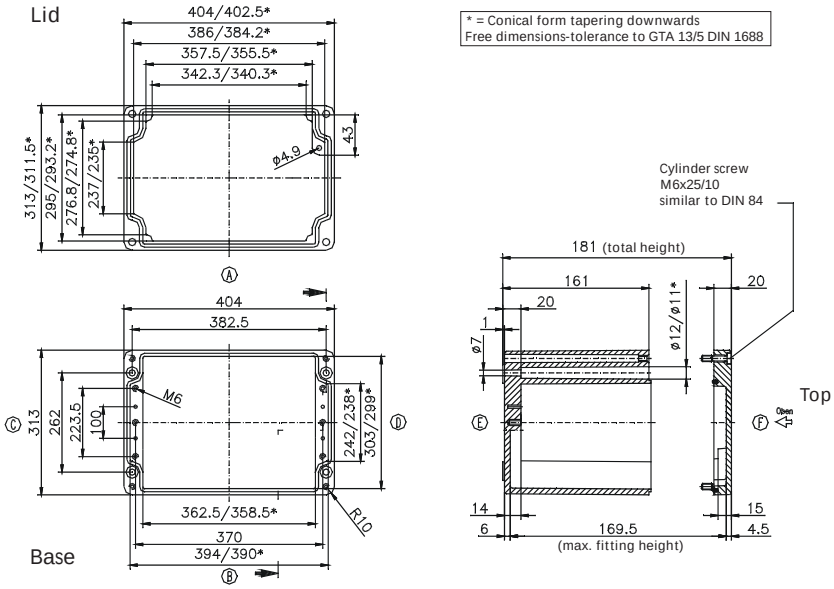

* Please quote mounting side

«ЭйБиЭн»
Тел.\факс +375(17) 390-51-85 info@abn.by Тел. +375(44) 592-00-86
Тел.\факс +375(17) 390-51-86 www.abn.by

Type: **01.31 40 23** External dimensions: **313 x 404 x 227 mm** Weight: **11000 g**

DIN rail length in mm	max. fitting length in mm	Earthing rail clamp	Mounting plate (thickness in mm)	External mounting brackets	External hinge* set	EMC version	Internal hinge* set	SWB / SBG / SBGL Corr.protection	Allen lid screws	Silicone lid seal	Sealable lid screws in steel	Turn bolt fastener on request	Quick lock
TS 35													
381	360	26	2	•	•	•	•	•	•	•	•	•	•

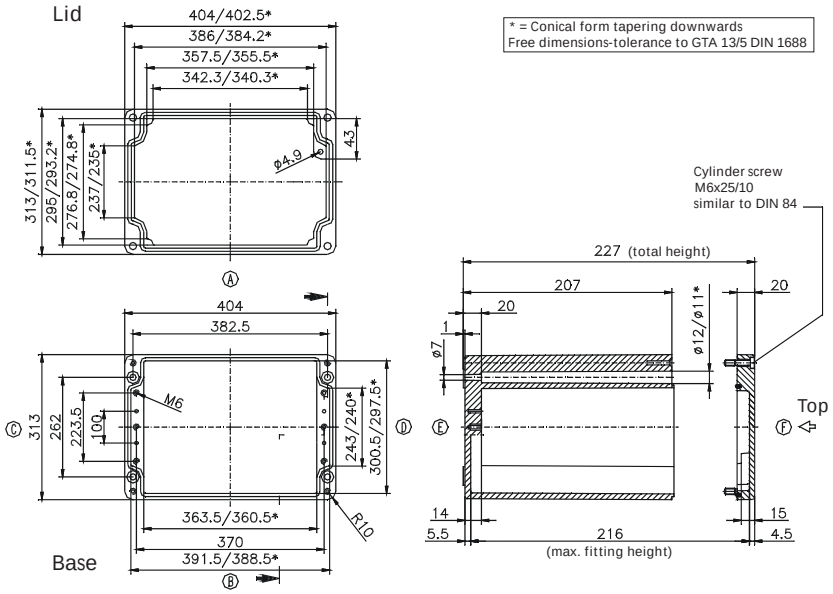

Maximum number of cable glands ***to DIN 50262****

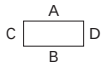

M	Corner dim.	Side A/B	Side C/D	PG	Corner dim.	Side A/B	Side C/D
12	17.25	246	162	7	17.25	246	162
16	25.30	126	72	9	21.85	160	99
20	27.60	100	68	11	25.30	112	72
25	37.95	54	33	13.5	27.60	100	64
32	48.30	30	20	16	31.05	77	53
40	60.95	18	12	21	37.95	54	33
50	69.00	15	9	29	48.30	30	20
63	74.75	12	8	36	60.95	18	12
				42	69.00	15	9
				48	74.75	14	8

Type: **01.31 60 11** External dimensions: **310 x 600 x 111 mm** Weight: **10160 g**

DIN rail length in mm	max. fitting length in mm	Earthing rail clamp	Mounting plate (thickness in mm)	External mounting brackets	External hinge* set	EMC version	Internal hinge* set	SWB / SBG / SBGL Corr.protection	Allen lid screws	Silicone lid seal	Sealable lid screws in steel	Turn bolt fastener on request	Quick lock
TS 35													
581	560	41	2	•	•	•	•	•	•	•	•	•	•

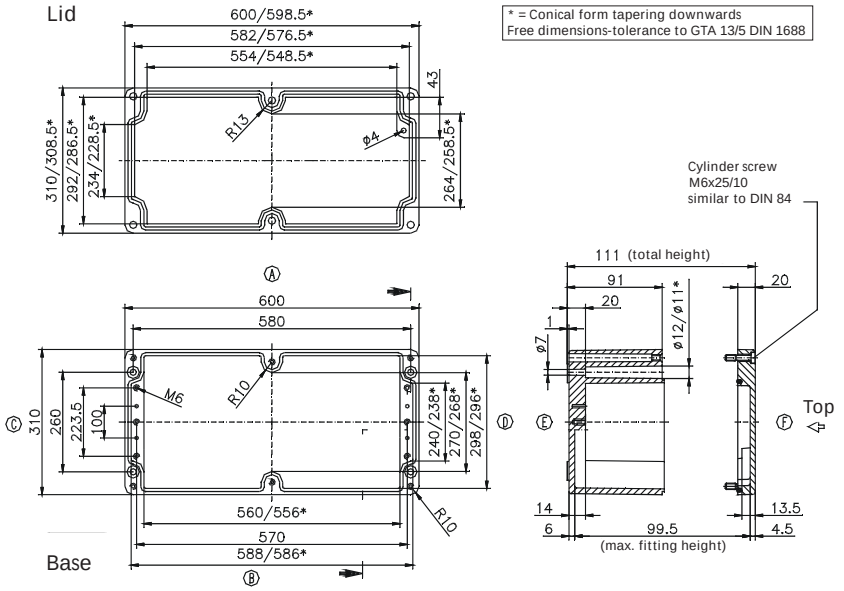

Maximum number of cable glands ***to DIN 50262****

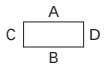

M	Corner dim.	Side A/B	Side C/D	PG	Corner dim.	Side A/B	Side C/D
12	17.25	150	68	7	17.25	150	68
16	25.30	76	28	9	21.85	96	42
20	27.60	60	24	11	25.30	72	27
25	37.95	30	12	13.5	27.60	60	24
32	48.30	20	7	16	31.05	48	18
40	60.95	10	4	21	37.95	28	12
50	69.00	8	3	29	48.30	20	6
63	74.75	6	3	36	60.95	10	4
				42	69.00	8	3
				48	74.75	6	3

* Please quote mounting side

«ЭйБиЭн»
Тел.\факс +375(17) 390-51-85 info@abn.by Тел. +375(44) 592-00-86
Тел.\факс +375(17) 390-51-86 www.abn.by

Type: ***01.31 60 18*** External dimensions: ***310 x 600 x 181 mm*** Weight: ***12560 g***

DIN rail length in mm	max. fitting length in mm	Earthing rail clamp	Mounting plate (thickness in mm)	External mounting brackets	External hinge* set	EMC version	Internal hinge* set	SWB / SBG / SBGL Corr.protection	Allen lid screws	Silicone lid seal	Sealable lid screws in steel	Turn bolt fastener on request	Quick lock
TS 35													
581	560	41	2	•	•	•	•	•	•	•	•	•	•

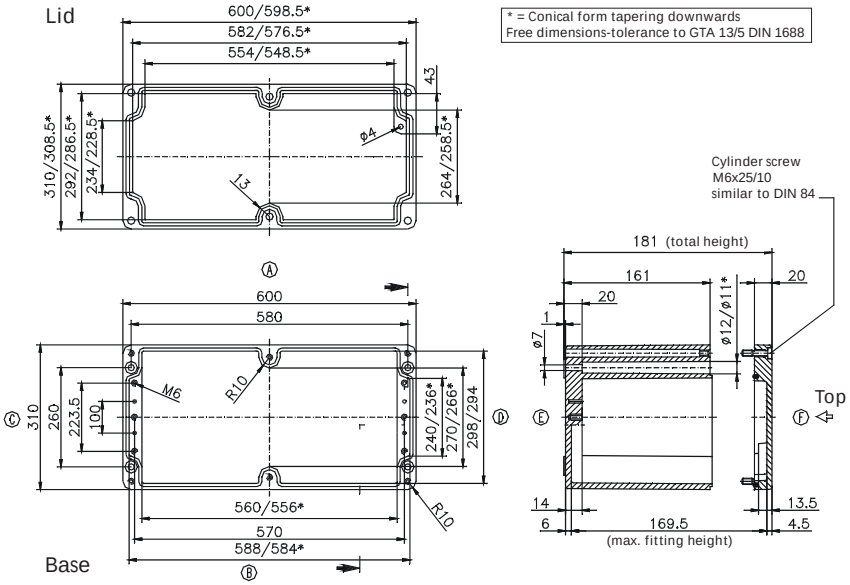

Maximum number of cable glands ***to DIN 50262****

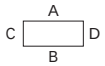

M	Corner dim.	Side A/B	Side C/D	***PG***	Corner dim.	Side A/B	Side C/D
12	17.25	150	68	7	17.25	150	68
16	25.30	76	28	9	21.85	96	42
20	27.60	60	24	11	25.30	72	27
25	37.95	30	12	13.5	27.60	60	24
32	48.30	20	7	16	31.05	48	18
40	60.95	10	4	21	37.95	28	12
50	69.00	8	3	29	48.30	20	6
63	74.75	6	3	36	60.95	10	4
				42	69.00	8	3
				48	74.75	6	3

* Please quote mounting side

«ЭйБиЭн»
Тел.\факс +375(17) 390-51-85 info@abn.by Тел. +375(44) 592-00-86
Тел.\факс +375(17) 390-51-86 www.abn.by

Type: **01.60 60 20** External dimensions: **600 x 600 x 202 mm** Weight: **26200 g**

DIN rail length in mm	max. fitting length in mm	Earthing rail clamp	Mounting plate (thickness in mm)	External mounting brackets	External hinge* set	EMC version	Internal hinge* set	SWB / SBG / SBGL Corr.protection	Allen lid screws	Silicone lid seal	Sealable lid screws in steel	Turn bolt fastener on request	Quick lock
TS 35													
575	552		2.5		•			•		•			

Maximum number of cable glands to ***DIN 50262****

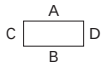

M	Corner dim.	Side A/B	Side C/D	PG	Corner dim.	Side A/B	Side C/D
12	17.25	270	270	7	17.25	270	270
16	25.30	140	140	9	21.85	184	184
20	27.60	108	108	11	25.30	134	134
25	37.95	56	56	13.5	27.60	108	108
32	48.30	32	32	16	31.05	84	84
40	60.95	22	22	21	37.95	56	56
50	69.00	16	16	29	48.30	32	32
63	74.75	12	12	36	60.95	18	18
				42	69.00	12	12
				48	74.75	12	12

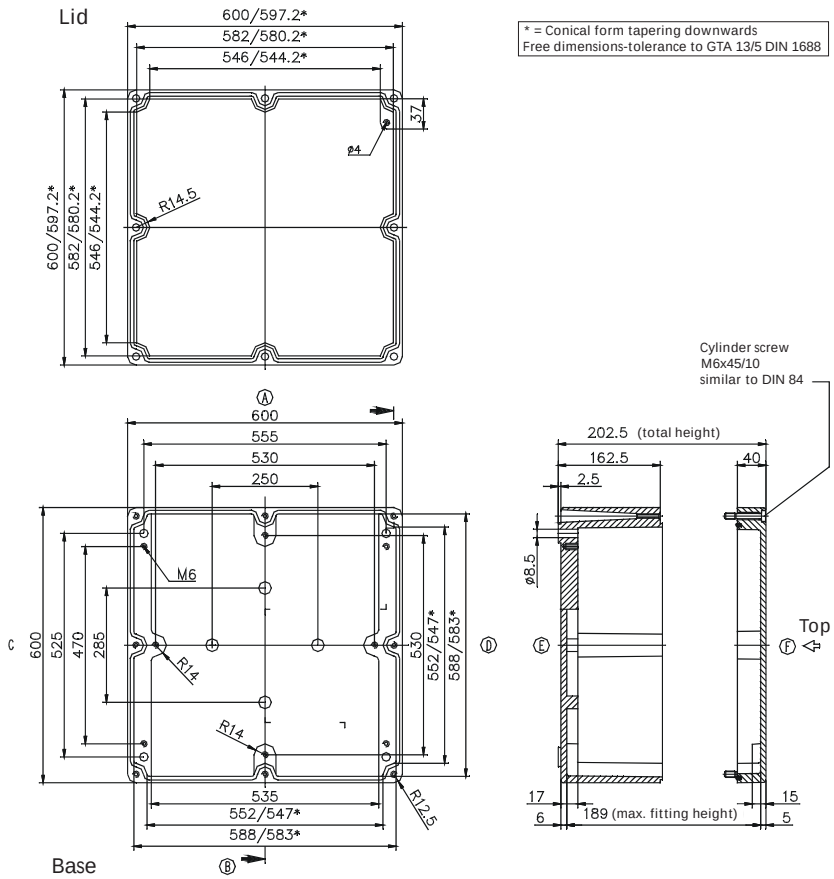

* Please quote mounting side

«ЭйБиЭн»
Тел.\факс +375(17) 390-51-85 info@abn.by Тел. +375(44) 592-00-86
Тел.\факс +375(17) 390-51-86 www.abn.by

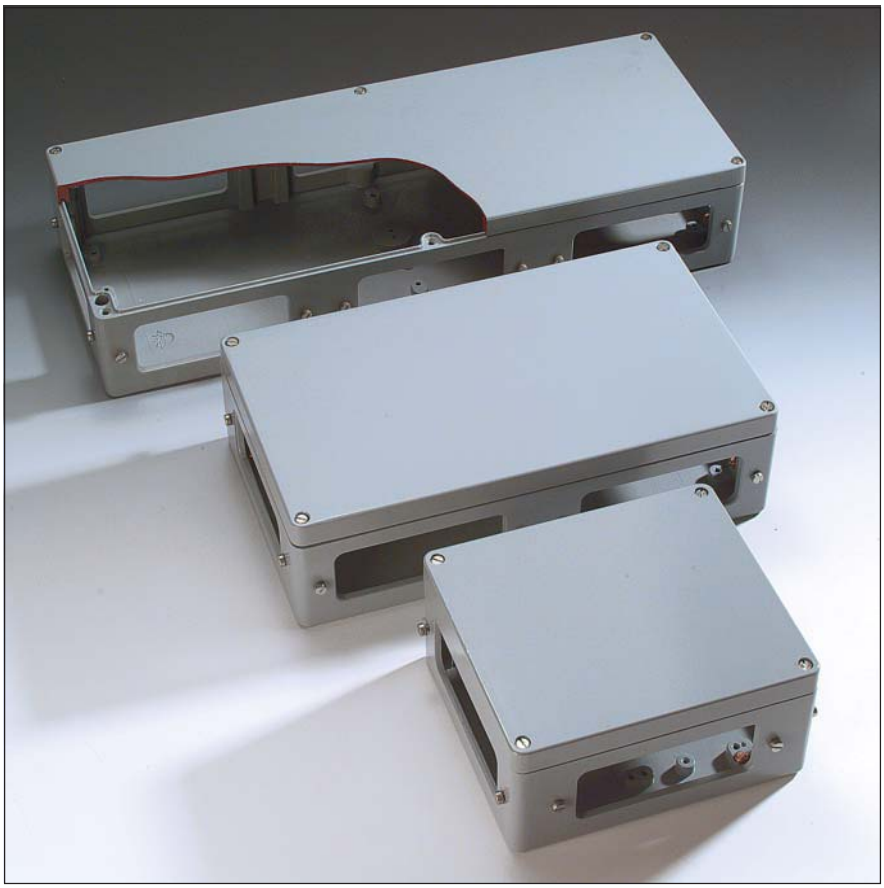

- Robust aluminium enclosure with 4, 6 or 8 flange openings
- Prepared for the installation of DIN rails

Technical data

Material:

DIN EN 1706 EN AC-AlSi 12 (Fe)

Painting:

powder coating

Colour:

RAL 7001, silver grey

special colour on request

Ingress protection:

IP 65 to EN 60529

Impact resistance:

7 Joule to EN 60079-0

Temperature range:

PU (polyurethane) seal (std.):	-40°C to +90°C
CR (chloroprene) seal:	-40°C to +100°C
VMQ (silicone) seal (optional):	-60°C to +130°C

Included in delivery

Aluminium enclosures consisting of lid, seal, incl. captive +/- stainless steel screws, base with 2 or 4 earthing screws.

Flange plates are not included in the scope of delivery, they have to be ordered separately.

«ЭйБиЭн»
Тел.\факс +375(17) 390-51-85 info@abn.by Тел. +375(44) 592-00-86
Тел.\факс +375(17) 390-51-86 www.abn.by

Aluminium Flange

Programme range

Order No.	W x L x H (mm)	No. of openings for flange mounting	DIN rail for terminals TS 35	Earthing rail (number of clamps)	External mounting brackets, set [1]	SWB / SBG / SBGL Corrosion protection	Allen lid screws [1]	Silicone lid seal up to +130ºC	Sealable lid screws in steel
11.23 20 11	230 x 200 x 111	4	•	10	•	•	•	•	•
11.23 28 11	230 x 280 x 111	4	•	16	•	•	•	•	•
11.23 40 11	230 x 400 x 111	6	•	25	•	•	•	•	•
11.23 60 11	230 x 600 x 111	8	•	40	•	•	•	•	•

[1]) stainless steel

Terminal mounting

Phoenix													Earth conductor connections														
DIN rail TS 15	X	X	X																								
DIN rail TS 35				X	X	X	X	X	X	X	X	X															
Voltage (V)	250	400	500	500	800	800	800	800	800	800	1000	1000															
Current (A)	24	32	41	17	24	32	41	57	76	101	150	150															
Nom. cross section (mm²)	2.5	3	5	1.5	2.5	2.5	4	6	10	16	35	50															
Terminal width (mm)	5.2	5.2	6.2	4.2	5.2	5.2	6.2	8.2	10.2	12.2	15.2	20															
Terminal type / Type	MBK 2,5 E	MBK 3 / E-Z	MBK 5 / E-Z	UK 1,5 N	UK 2,5 N	UK 3 N	UK 5 N	UK 6 N	UK 10 N	UK 16 N	UK 35	UKH 50				MSLKG 5 insulated, green/yellow	USLKG 1,5 N insulated green/yellow	USLKG 2,5 N insulated green/yellow	USLKG 6 N insulated green/yellow	USLKG 10 N insulated green/yellow	USKLG 16 N insulated green/yellow	USLKG 3 insulated green/yellow	USLKG 5 insulated green/yellow	USLKG 50 insulated green/yellow	USLKG 95 insulated green/yellow	Earthing bar 2.5 mm² with cable lug max. 10 mm²	Earthing screw M4 with cable lug max. 6 mm²	M6 with cable lug max. 35 mm²
11.23 20 11	25*	25*	21*	31*	25*	25*	21*	16*	13	10	8	6														10		
11.23 28 11	41*	41*	34*	51*	41*	41*	34*	26*	21	17	14	10														16	1	
11.23 40 11	64*	64*	54*	80*	64*	64*	54*	40*	32	27	22	16														25	2	
11.23 60 11	103*	103*	86*	127*	103*	103*	86*	65*	52	43	35	26														40	2	

as required

Weidmüller																			Earth conductor connections									
DIN rail TS 15	X	X	X	X																								
DIN rail TS 35					X	X	X	X	X	X	X	X	X															
Voltage (V)	250	400	250	400	500	800	800	800	1000	1000	1000	1000	1000															
Current (A)	17	15	24	32	24	24	32	41	57	76	125	192	232															
Nom. cross section (mm²)	1.5	1.5	2.5	4	2.5	2.5	4	6	10	16	35	70	95															
Terminal width (mm)	5.1	3.5	5.1	6.1	5.1	5.1	6.1	8.1	10	12	16	20.5	27															
Terminal type / Type	AKZ1.5	WDU 1.5 / R 3.5	AKZ2.5	AKZ 4	WDU 2.5 N	WDU 2.5	WDU 4	WDU 6	WDU 10	WDU 16	WDU 35	WDU 70 N	WDU 70 / 95						WPE 2.5 green/yellow	WPE 4 green/yellow	WPE 6 green/yellow	WPE 10 green/yellow	WPE 16 green/yellow	WPE 35 green/yellow	WPE 70 / 95 green/yellow	Earthing bar 2.5 mm² with cable lug max. 10 mm²	Earthing screw M4 with cable lug max. 6 mm²	M6 with cable lug max. 35 mm²
11.23 20 11	25*	36*	25*	21*	25*	25*	21*	16	12	10	8	6	4													10		
11.23 28 11	42*	60*	42*	35*	42*	42*	35*	26	21	17	13	10	7													16	1	
11.23 40 11	66*	94*	66*	55*	66*	66*	55*	41	33	27	20	16	12													25	2	
11.23 60 11	106*	152*	106*	88*	106*	106*	88*	66	53	44	33	25	19													40	2	

as required

* 2 DIN rails possible = double number of terminals
** 3 DIN rails possible = triple number of terminals

«ЭйБиЭн»
Тел.\факс +375(17) 390-51-85 info@abn.by Тел. +375(44) 592-00-86
Тел.\факс +375(17) 390-51-86 www.abn.by

Accessories

Blind flange
undrilled with round seal

Order No. ***10.00 60 01***

Flange with drill holes
(PG and metric) on request

Flange with cut-out for heavy industrial connectors

Order No.	cut-out for
10.00 60 06	HAN 6B or compatible
10.00 60 16	HAN 16B or compatible
10.00 60 24	HAN 24B or compatible

For further accessories please refer to the Aluminium-Standard range

«ЭйБиЭн»
Тел.\факс +375(17) 390-51-85 info@abn.by Тел. +375(44) 592-00-86
Тел.\факс +375(17) 390-51-86 www.abn.by

Type: **11.23 20 11** External dimensions: **230 x 200 x 111 mm** Weight: **2840 g**

DIN rail length in mm	max. fitting length in mm	Earthing rail clamp	Mounting plate (thickness in mm)	External mounting brackets	External hinge* set	EMC version	Internal hinge* set	SWB / SBG / SBGL Corr.protection	Allen lid screws	Silicone lid seal	Sealable lid screws in steel	Turn bolt fastener on request	Quick lock
TS 35													
155	135	10		•				•	•	•	•		

Maximum number of cable glands to ***DIN 50262****

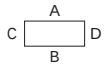

M	Corner dim.	Side A/B	Side C/D	PG	Corner dim.	Side A/B	Side C/D
12	17.25	147	95	7	17.25	147	95
16	25.30	70	43	9	21.85	96	55
20	27.60	55	32	11	25.30	70	40
25	37.95	28	18	13.5	27.60	55	32
32	48.30	17	10	16	31.05	44	28
40	60.95	12	7	21	37.95	27	18
50	69.00	7	4	29	48.30	17	10
63	74.75	6	3	36	60.95	12	7
				42	69.00	7	4
				48	74.75	6	3

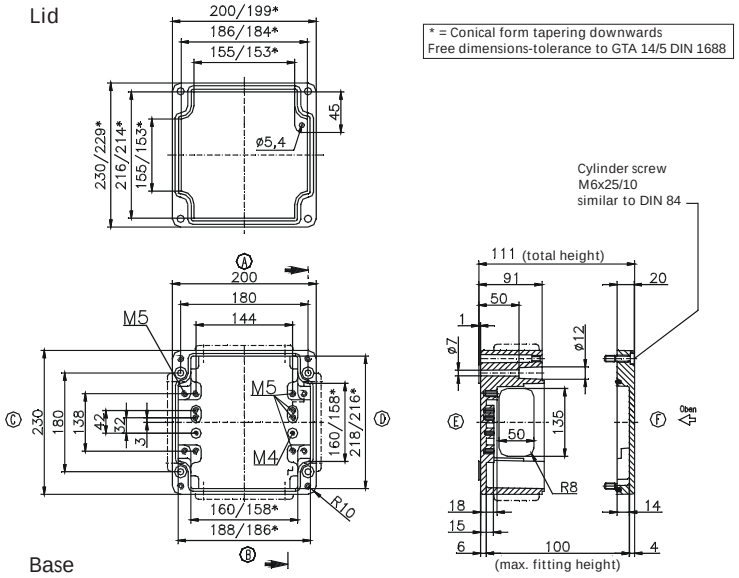

Type: **11.23 28 11** External dimensions: **230 x 280 x 111 mm** Weight: **3380 g**

DIN rail length in mm	max. fitting length in mm	Earthing rail clamp	Mounting plate (thickness in mm)	External mounting brackets	External hinge* set	EMC version	Internal hinge* set	SWB / SBG / SBGL Corr.protection	Allen lid screws	Silicone lid seal	Sealable lid screws in steel	Turn bolt fastener on request	Quick lock
TS 35													
238	215	16		•				•	•	•	•		

Maximum number of cable glands to ***DIN 50262****

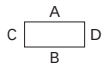

M	Corner dim.	Side A/B	Side C/D	PG	Corner dim.	Side A/B	Side C/D
12	17.25	205	122	7	17.25	205	122
16	25.30	98	54	9	21.85	128	77
20	27.60	78	51	11	25.30	98	54
25	37.95	40	24	13.5	27.60	75	48
32	48.30	22	15	16	31.05	60	38
40	60.95	15	4	21	37.95	38	24
50	69.00	11	6	29	48.30	22	15
63	74.75	8	6	36	60.95	14	8
				42	69.00	10	6
				48	74.75	10	6

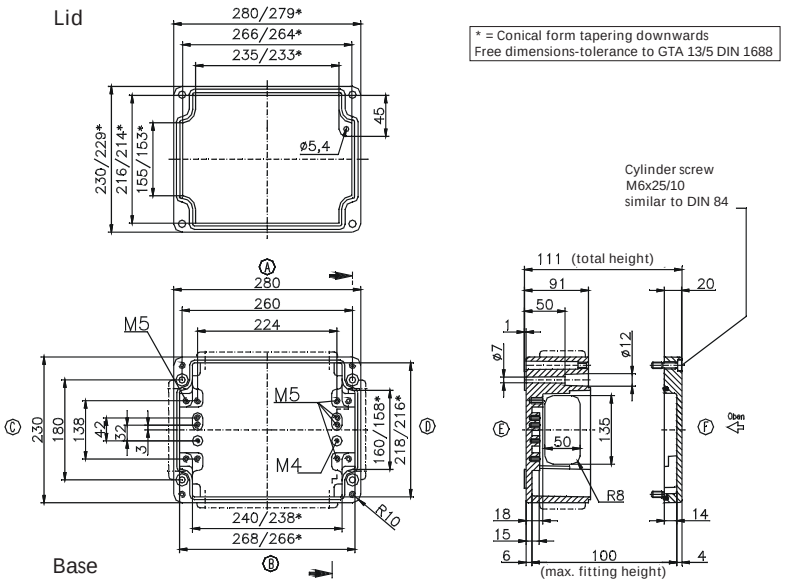

* Please quote mounting side

«ЭйБиЭн»
Тел.\факс +375(17) 390-51-85 info@abn.by Тел. +375(44) 592-00-86
Тел.\факс +375(17) 390-51-86 www.abn.by

Type: **11.23 40 11** External dimensions: **230 x 400 x 111 mm** Weight: **4600 g**

DIN rail length in mm	max. fitting length in mm	Earthing rail clamp	Mounting plate (thickness in mm)	External mounting brackets	External hinge* set	EMC version	Internal hinge* set	SWB / SBG / SBGL Corr.protection	Allen lid screws	Silicone lid seal	Sealable lid screws in steel	Turn bolt fastener on request	Quick lock
TS 35													
358	335	25		•				•	•	•	•		

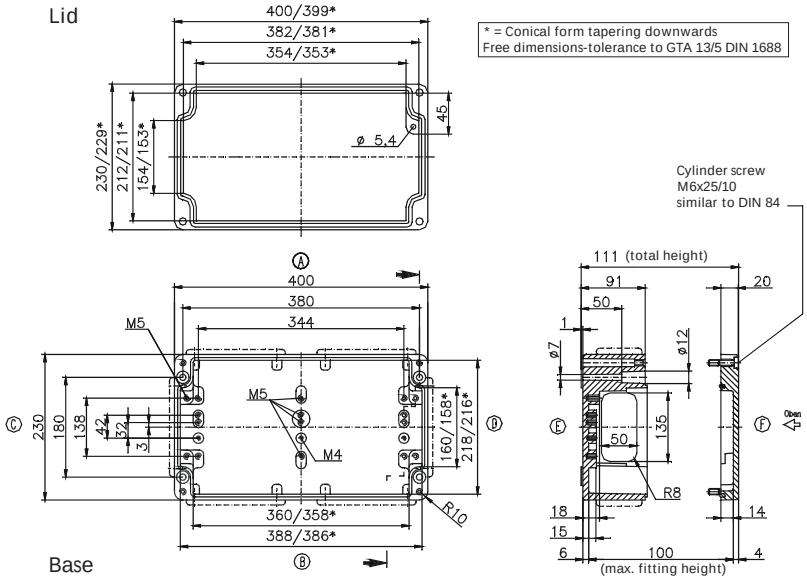

Maximum number of cable glands to ***DIN 50262****

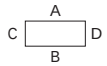

M	Corner dim.	Side A/B	Side C/D	PG	Corner dim.	Side A/B	Side C/D
12	17.25	246	162	7	17.25	246	162
16	25.30	126	72	9	21.85	160	99
20	27.60	100	68	11	25.30	112	72
25	37.95	54	33	13.5	27.60	100	64
32	48.30	30	20	16	31.05	77	53
40	60.95	18	12	21	37.95	54	33
50	69.00	15	9	29	48.30	30	20
63	74.75	12	8	36	60.95	18	12
				42	69.00	15	9
				48	74.75	14	8

Type: **11.23 60 11** External dimensions: **230 x 600 x 111 mm** Weight: **6100 g**

DIN rail length in mm	max. fitting length in mm	Earthing rail clamp	Mounting plate (thickness in mm)	External mounting brackets	External hinge* set	EMC version	Internal hinge* set	SWB / SBG / SBGL Corr.protection	Allen lid screws	Silicone lid seal	Sealable lid screws in steel	Turn bolt fastener on request	Quick lock
TS 35													
558	535	40		•				•	•	•	•		

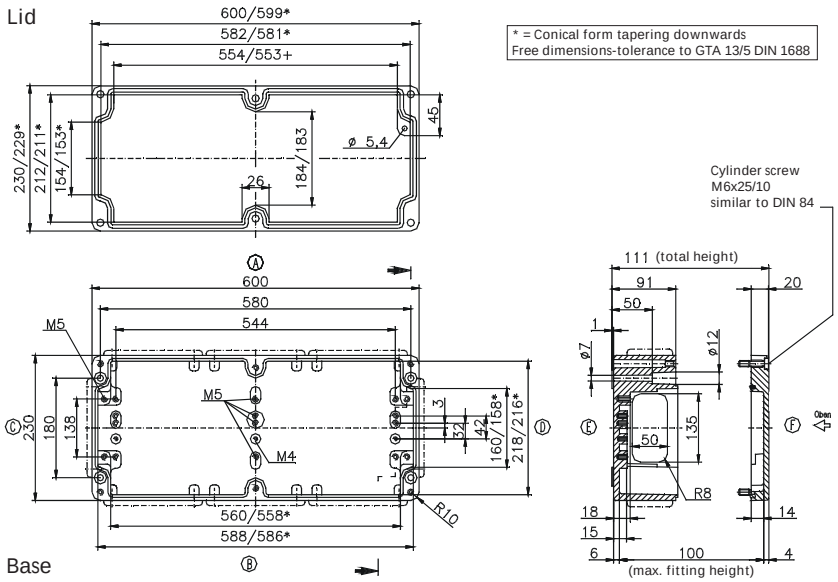

Maximum number of cable glands to ***DIN 50262****

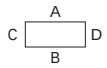

M	Corner dim.	Side A/B	Side C/D	PG	Corner dim.	Side A/B	Side C/D
12	17.25	150	68	7	17.25	150	68
16	25.30	76	28	9	21.85	96	42
20	27.60	60	24	11	25.30	72	27
25	37.95	30	12	13.5	27.60	60	24
32	48.30	20	7	16	31.05	48	18
40	60.95	10	4	21	37.95	28	12
50	69.00	8	3	29	48.30	20	6
63	74.75	6	3	36	60.95	10	4
				42	69.00	8	3
				48	74.75	6	3

* Please quote mounting side

«ЭйБиЭн»
Тел.\факс +375(17) 390-51-85 info@abn.by Тел. +375(44) 592-00-86
Тел.\факс +375(17) 390-51-86 www.abn.by

Applications

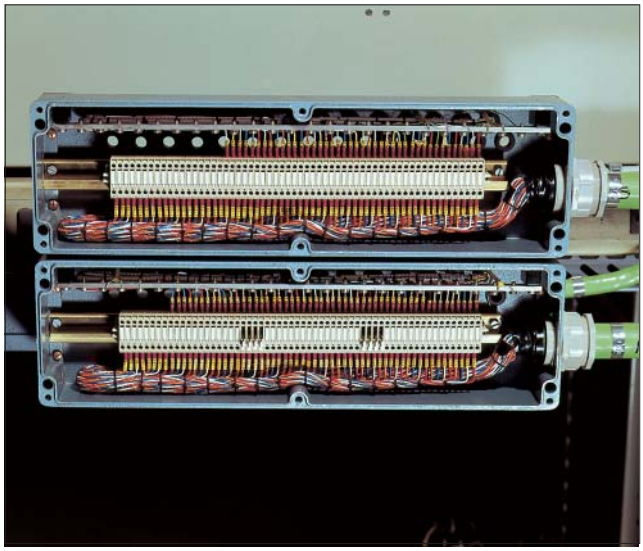

«ЭйБиЭн»
Тел.\факс +375(17) 390-51-85 info@abn.by Тел. +375(44) 592-00-86
Тел.\факс +375(17) 390-51-86 www.abn.by

UL® / cUL®

- Robust plastic enclosure for MCR and automation engineering
- Fixing options for DIN rails and mounting plates
- Universal configuration

Included in delivery

Plastic enclosure in glass fibre reinforced polyester, consisting of lid, seal, incl. captive +/- stainless steel screws, base with 2 or 4 earthing screws

Technical data

Material:

glass fibre reinforced duroplastic polyester

Colour:

RAL 7000, squirrel grey

special colour on request

Ingress protection:

IP 66 to EN 60529

Impact resistance:

7 Joule to EN 60079-0

Surface resistance:

$>10^{12}$ Ohm to IEC 60093

Flammability:

V0 / self-extinguishing, UL 94

Insulation:

fully insulated to VDE 0100

Disruptive strength:

18 KV/mm, IEC 60243-1

Toxicity:

halogen-free

Temperature range:

PU (polyurethane) seal (std.):	-40°C to +90°C
CR (chloroprene) seal:	-40°C to +100°C
VMQ (silicone) seal (optional):	-60°C to +130°C

«ЭйБиЭн»
Тел.\факс +375(17) 390-51-85 info@abn.by Тел. +375(44) 592-00-86
Тел.\факс +375(17) 390-51-86 www.abn.by

Polyester Standard

Programme range

Order No.	W x L x H (mm)	Order No.	W x L x H (mm)
02.06 06 03	55 x 55 x 37	***02.12 22 09***	120 x 220 x 91
02.06 06 06	55 x 55 x 59	***02.16 16 09***	160 x 160 x 91
02.08 08 06	75 x 80 x 56	***02.16 26 09***	160 x 260 x 91
02.08 08 08	75 x 80 x 75	***02.16 36 09***	160 x 360 x 91
02.08 11 06	75 x 110 x 56	***02.16 56 09***	160 x 560 x 91
02.08 11 08	75 x 110 x 75	***02.25 26 12***	250 x 255 x 121
02.08 16 06	75 x 160 x 56	***02.25 26 16***	250 x 255 x 161
02.08 16 08	75 x 160 x 75	***02.25 40 12***	250 x 400 x 121
02.08 19 06	75 x 190 x 56	***02.25 40 16***	250 x 400 x 161
02.08 19 08	75 x 190 x 75	***02.25 60 12***	250 x 600 x 121
02.08 23 06	75 x 230 x 56	***02.36 36 09***	360 x 360 x 91
02.08 23 08	75 x 230 x 75	***02.41 40 12***	405 x 400 x 121
02.10 32 08	100 x 320 x 81	***02.41 40 20***	405 x 400 x 201
02.12 12 09	120 x 122 x 91		

Accessories and versions

Order No.	DIN rail* for terminals TS 15	DIN rail* for terminals TS 35	Mounting plate thickness in mm	External mounting brackets set [2]	Aluminium external hinge approx. 125° set [3]	Allen lid screws [2]	Silicone lid seal	Sealable lid screws [2]	EMC version
02.06 06 03	•								
02.06 06 06	•								
02.08 08 06	•		2.0 [4]	•		•	•	•	•
02.08 08 08	•		2.0 [4]	•		•	•	•	•
02.08 11 06	•		2.0 [4]	•		•	•	•	•
02.08 11 08	•		2.0 [4]	•		•	•	•	•
02.08 16 06	•		2.0 [4]	•		•	•	•	•
02.08 16 08	•		2.0 [4]	•		•	•	•	•
02.08 19 06	•		2.0 [4]	•		•	•	•	•
02.08 19 08	•		2.0 [4]	•		•	•	•	•
02.08 23 06	•			•		•	•	•	•
02.08 23 08	•			•		•	•	•	•
02.10 32 08	•		1.5 [1]	•	•	•	•	•	•
02.12 12 09		•	1.5 [1]	•	•	•	•	•	•
02.12 22 09		•	1.5 [1]	•	•	•	•	•	•
02.16 16 09		•	1.5 [1]	•	•	•	•	•	•
02.16 26 09		•	1.5 [1]	•	•	•	•	•	•
02.16 36 09		•	1.5 [1]	•	•	•	•	•	•
02.16 56 09		•	2.0 [1]	•	•	•	•	•	•
02.25 26 12		•	2.0 [1]	•	•	•	•	•	•
02.25 26 16		•	2.0 [1]	•	•	•	•		•
02.25 40 12		•	2.0 [1]	•	•	•	•	•	•
02.25 40 16		•	2.0 [1]	•	•	•	•		•
02.25 60 12		•	2.0 [1]	•	•	•	•	•	•
02.36 36 09		•	2.0 [1]	•	•	•	•	•	•
02.41 40 12		•	2.0 [1]	•	•	•	•	•	•
02.41 40 20		•	2.0 [1]	•	•	•	•	•	•

[1]) Galvanized sheet steel [2]) Stainless steel [3]) Please quote installation side A-D when ordering [4]) Laminated paper

* TS 32 on request

«ЭйБиЭн»
Тел.\факс +375(17) 390-51-85 info@abn.by Тел. +375(44) 592-00-86
Тел.\факс +375(17) 390-51-86 www.abn.by

Terminal mounting

	Phoenix															Earth conductor connections													
DIN rail TS 15	X	X	X																										
DIN rail TS 35				X	X	X	X	X	X	X	X	X	X	X	X														
Voltage (V)	250	400	500	500	800	800	800	800	800	800	1000	1000	1000	1000	1000														
Current (A)	24	32	41	17	24	32	41	57	76	101	150	150	232	309	415														
Nom. cross section (mm²)	2.5	2.5	4	1.5	2.5	2.5	4	6	10	16	35	50	95	150	240														
Terminal width (mm)	5.2	5.2	6.2	4.2	5.2	5.2	6.2	8.2	10.2	12.2	15.2	20	25	31	36														
Terminal type / Type	MBK 2,5 E	MBK 3 / E-Z	MBK 5 / E-Z	UK 1,5 N	UK 2,5 N	UK 3 N	UK 5 N	UK 6 N	UK 10 N	UK 16 N	UK 35	UKH 50	UKH 95	UKH 150	UKH 240	MSLKG 5 insulated, green/yellow	USLKG 1,5 N insulated green/yellow	USLKG 2,5 N insulated green/yellow	USLKG 6 N insulated green/yellow	USLKG 10 N insulated green/yellow	USKLG 16 N insulated green/yellow	USLKG 3 insulated green/yellow	USLKG 5 insulated green/yellow	USLKG 50 insulated green/yellow	USLKG 95 insulated green/yellow		Earthing bar 2.5 mm² with cable lug max. 10 mm²	Earthing screw M4 with cable lug max. 6 mm²	M6 with cable lug max. 35 mm²	
02.06 06 03																													
02.06 06 06																												1	
02.08 08 06	9	9	7																									2	
02.08 08 08	9	9	7																									2	
02.08 11 06	16	16	13																									2	
02.08 11 08	16	16	13																									2	
02.08 16 06	25	25	21																									2	
02.08 16 08	25	25	21																									2	
02.08 19 06	30	30	25																									2	
02.08 19 08	30	30	25																									2	
02.08 23 06	39	39	32																									2	
02.08 23 08	39	39	32																									2	
02.10 32 08	55	55	46																									2	
02.12 12 09				20	16	16	13	10	8											as required						5		4	
02.12 22 09				43	35	35	29	22	17	15	12															13		4	
02.16 16 09				29	23	23	19	14	11	10	8															8		4	
02.16 26 09				53	42	42	35	27	21	18	14															16		4	
02.16 36 09				76	61	61	51	39	31	26	21															23		4	
02.16 56 09				124	100	100	84	63	51	42	34															38		4	
02.25 26 12				51*	41*	41*	34*	26*	21*	17*	14*															16		4	
02.25 26 16				51*	41*	41*	34*	26*	21*	17*	14*															16		4	
02.25 40 12				85*	69*	69*	57*	43*	35*	29*	23*	17*														26		4	
02.25 40 16				85*	69*	69*	57*	43*	35*	29*	23*	17*														26		4	
02.25 60 12				133*	107*	107*	90*	68*	54*	45*	36*	27*														38		4	
02.36 36 09				76**	61**	61**	51**	39**	31**	26*	21*															23		4	
02.41 40 12				85**	59**	69**	57**	43**	35**	29*	23*	17*	14													26		4	
02.41 40 20				85**	59**	69**	57**	43**	35**	29*	23*	17*	14	12	10											26		4	

* 2 DIN rails possible = double number of terminals
** 3 DIN rails possible = triple number of terminals

«ЭйБиЭн»
Тел.\факс +375(17) 390-51-85 info@abn.by Тел. +375(44) 592-00-86
Тел.\факс +375(17) 390-51-86 www.abn.by

Terminal mounting

	Weidmüller																			Earth conductor connections								
DIN rail TS 15				X	X	X	X																					
DIN rail TS 35								X	X	X	X	X	X	X	X	X	X	X	X									
Voltage (V)	400	400	400	250	400	250	400	500	800	800	800	1000	1000	1000	1000	1000	1000	1000	1000									
Current (A)	32	32	32	17	17	24	32	24	24	32	41	57	76	125	192	232	269	309	415									
Nom. cross section (mm²)	4	4	4	1.5	1.5	2.5	4	2.5	2.5	4	6	10	16	35	70	95	120	150	240									
Terminal width (mm)	38	52	92	5.1	3.5	5.1	6.1	5.1	5.1	6.1	8	10	12	16	20.5	27	27	32	36									
Terminal type / Type	BK 4 (4 pole)	BK 6 (6 pole)	BK 12 (12 pole)	AKZ 1,5	WDU 1,5 / R 3,5	AKZ 2,5	AKZ 4	WDU 2,5 N	WDU 2,5	WDU 4	WDU 6	WDU 10	WDU 16	WDU 35	WDU 70 N	WDU 70 / 95	WDU 95 / 120 N	WDU 120 / 150	WDU 240	WPE 2,5 green/yellow	WPE 4 green/yellow	WPE 6 green/yellow	WPE 10 green/yellow	WPE 16 green/yellow	WPE 35 green/yellow	WPE 70 / 95 green/yellow	Earthing bar 2.5 mm² with cable lug max. 10 mm²	Earthing screw M4 with cable lug max. 6 mm²	M6 with cable lug max. 35 mm²
02.06 06 03	1																												
02.06 06 06	1																											1	
02.08 08 06	1	1		8	11	8	6	8																				2	
02.08 08 08	1	1		9	11	8	6	8																				2	
02.08 11 06		1	1	15	21	15	12	15																				2	
02.08 11 08		1	1	15	21	15	12	15																				2	
02.08 16 06			1	25	36	25	21	25																				2	
02.08 16 08			1	25	36	25	21	25																				2	
02.08 19 06				30	43	30	25	30																				2	
02.08 19 08				30	43	30	25	30																				2	
02.08 23 06				39	56	39	32	39																				2	
02.08 23 08				39	56	39	32	39																				2	
02.10 32 08				56	80	56	47	56																				2	
02.12 12 09									16	13	10												as required			5		4
02.12 22 09									35	29	22															13		4
02.16 16 09									23	19	14	11	9													8		4
02.16 26 09									43	36	27	21	18													16		4
02.16 36 09									63	52	39	31	26													23		4
02.16 56 09									103	86	64	51	43													38		4
02.25 26 12									42*	35*	26*	21*	17*	13	10											16		4
02.25 26 16									42*	35*	26*	21*	17*	13	10	7	7									16		4
02.25 40 12									71*	59*	44*	35*	29*	22*	17											26		4
02.25 40 16									71*	59*	44*	35*	29*	22*	17											26		4
02.25 60 12									111*	92*	69*	55*	46*	34*	27											38		4
02.36 36 09									63**	52**	39**	31**	26*	19*												23		4
02.41 40 12									71**	59**	44**	35**	29*	22*	17											26		4
02.41 40 20									71**	59**	44**	35**	29*	22*	17	13	13	11	10							26		4

* 2 DIN rails possible = double number of terminals
** 3 DIN rails possible = triple number of terminals

«ЭйБиЭн»
Тел.\факс +375(17) 390-51-85 info@abn.by Тел. +375(44) 592-00-86
Тел.\факс +375(17) 390-51-86 www.abn.by

Accessories

External hinge
Material cast aluminium
Opening angle 150°
(set = 2 pcs.)

Order No. ***10.02 70 01***

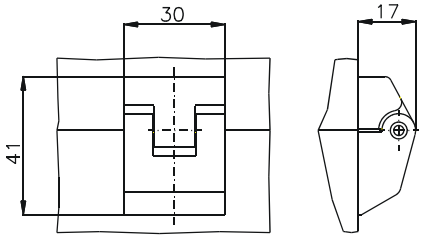

External mounting brackets (Set = 4 pcs.)

Order No.	for enclosure
10.03 11 01	02.08 08 06 - 02.08 23 08
10.03 11 02	02.10 32 08 - 02.41 40 20

Type 10.03 11 01

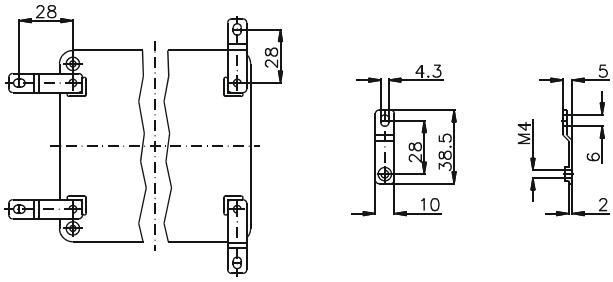

Type 10.03 11 02

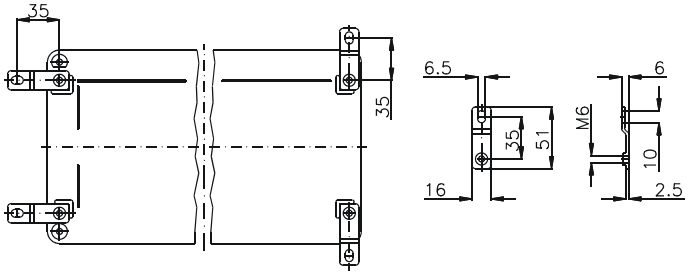

«ЭйБиЭн»
Тел.\факс +375(17) 390-51-85 info@abn.by Тел. +375(44) 592-00-86
Тел.\факс +375(17) 390-51-86 www.abn.by

Type: **02.06 06 03** External dimensions: ***55 x 55 x 37 mm*** Weight: ***118 g***

DIN rail length in mm	max. fitting length in mm	Mounting plate (thickness in mm)	External mounting brackets	External hinge* set	EMC version	Allen lid screws	Silicone lid seal	Sealable lid screws

Maximum number of cable glands to ***DIN 50262****

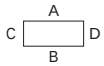

M	Corner dim.	Side A/B	Side C/D	PG	Corner dim.	Side A/B	Side C/D
12	17.25	2	2	7	17.25	2	2
16	25.30	1	1	9	21.85	1	1
20	27.60			11	25.30		
25	37.95			13.5	27.60		
32	48.30			16	31.05		
40	60.95			21	37.95		
50	69.00			29	48.30		
63	74.75			36	60.95		
				42	69.00		
				48	74.75		

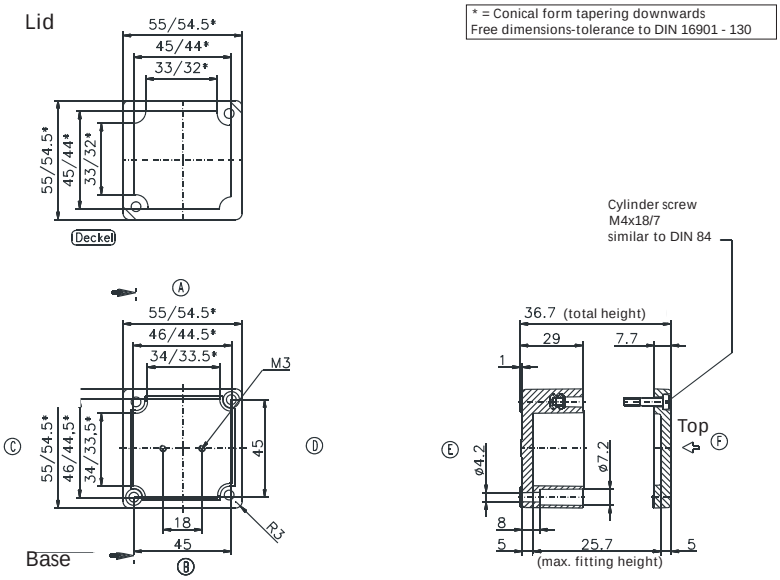

Type: **02.06 06 06** External dimensions: ***55 x 55 x 59 mm*** Weight: ***152 g***

DIN rail length in mm	max. fitting length in mm	Mounting plate (thickness in mm)	External mounting brackets	External hinge* set	EMC version	Allen lid screws	Silicone lid seal	Sealable lid screws

Maximum number of cable glands to ***DIN 50262****

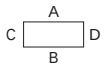

M	Corner dim.	Side A/B	Side C/D	PG	Corner dim.	Side A/B	Side C/D
12	17.25	5	5	7	17.25	5	5
16	25.30	2	2	9	21.85	3	3
20	27.60	1	1	11	25.30	2	2
25	37.95	1	1	13.5	27.60	1	1
32	48.30	1	1	16	31.05	1	1
40	60.95			21	37.95	1	1
50	69.00			29	48.30		
63	74.75			36	60.95		
				42	69.00		
				48	74.75		

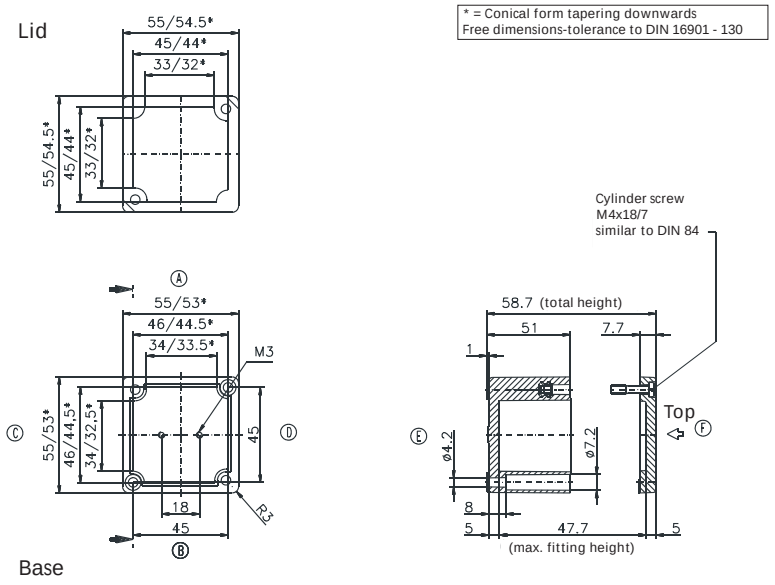

* Please quote mounting side

«ЭйБиЭн»
Тел.\факс +375(17) 390-51-85 info@abn.by Тел. +375(44) 592-00-86
Тел.\факс +375(17) 390-51-86 www.abn.by

Type: **02.08 08 06** External dimensions: ***75 x 80 x 56 mm*** Weight: ***280 g***

DIN rail length in mm	max. fitting length in mm	Mounting plate (thickness in mm)	External mounting brackets	External hinge* set	EMC version	Allen lid screws	Silicone lid seal	Sealable lid screws
TS 15								
63	49	2	•		•	•	•	•

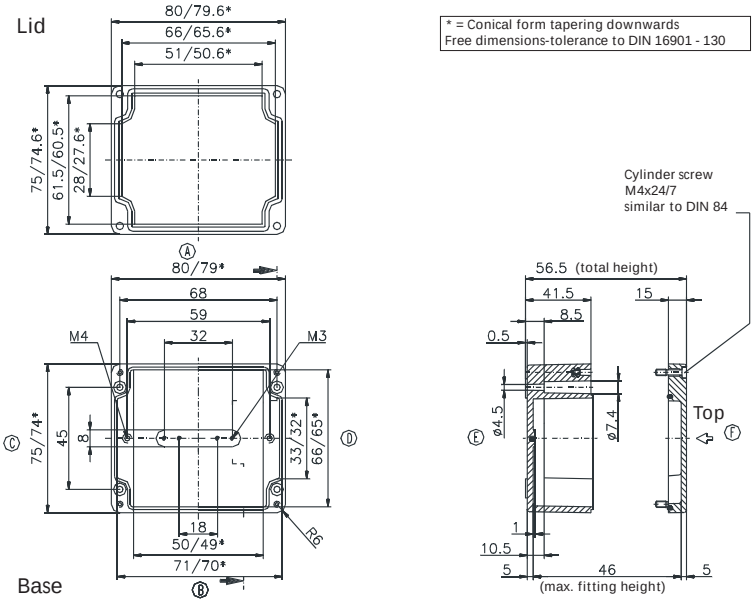

Maximum number of cable glands to ***DIN 50262****

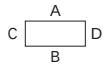

M	Corner dim.	Side A/B	Side C/D	*PG*	Corner dim.	Side A/B	Side C/D
12	17,25	6	3	7	17,25	6	3
16	25,30	2	1	9	21,85	4	1
20	27,60	2	1	11	25,30	2	1
25	37,95	1		13,5	27,60	2	1
32	48,30			16	31,05	2	1
40	60,95			21	37,95	1	
50	69,00			29	48,30		
63	74,75			36	60,95		
				42	69,00		
				48	74,75		

Type: **02.08 08 08** External dimensions: ***75 x 80 x 75 mm*** Weight: ***340 g***

DIN rail length in mm	max. fitting length in mm	Mounting plate (thickness in mm)	External mounting brackets	External hinge* set	EMC version	Allen lid screws	Silicone lid seal	Sealable lid screws
TS 15								
63	49	2	•		•	•	•	•

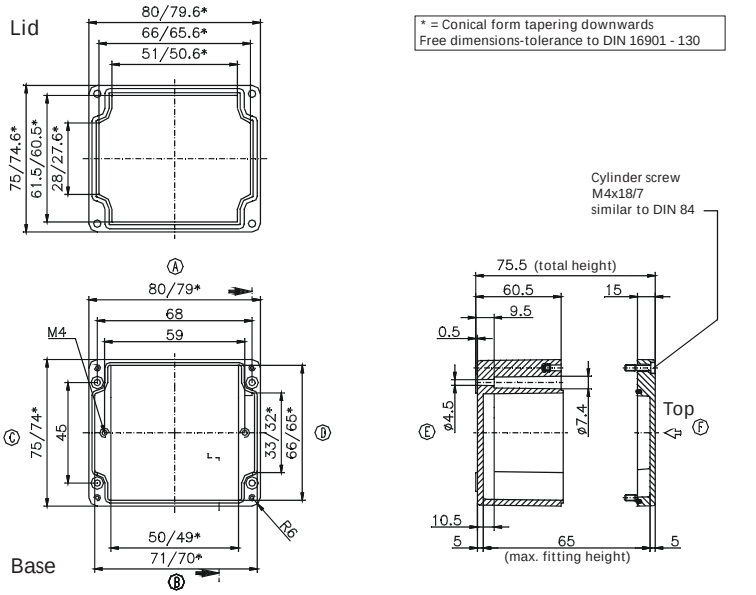

Maximum number of cable glands to ***DIN 50262****

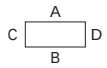

M	Corner dim.	Side A/B	Side C/D	*PG*	Corner dim.	Side A/B	Side C/D
12	17,25	9	5	7	17,25	9	5
16	25,30	5	2	9	21,85	6	3
20	27,60	4	2	11	25,30	4	2
25	37,95	1	1	13,5	27,60	4	2
32	48,30	1	1	16	31,05	3	1
40	60,95			21	37,95	1	1
50	69,00			29	48,30	1	
63	74,75			36	60,95		
				42	69,00		
				48	74,75		

* Please quote mounting side

«ЭйБиЭн»
Тел.\факс +375(17) 390-51-85 info@abn.by Тел. +375(44) 592-00-86
Тел.\факс +375(17) 390-51-86 www.abn.by

Type: **02.08 11 06** External dimensions: ***75 x 110 x 56 mm*** Weight: ***350 g***

DIN rail length in mm	max. fitting length in mm	Mounting plate (thickness in mm)	External mounting brackets	External hinge* set	EMC version	Allen lid screws	Silicone lid seal	Sealable lid screws
TS 15								
98	79	2	•		•	•	•	•

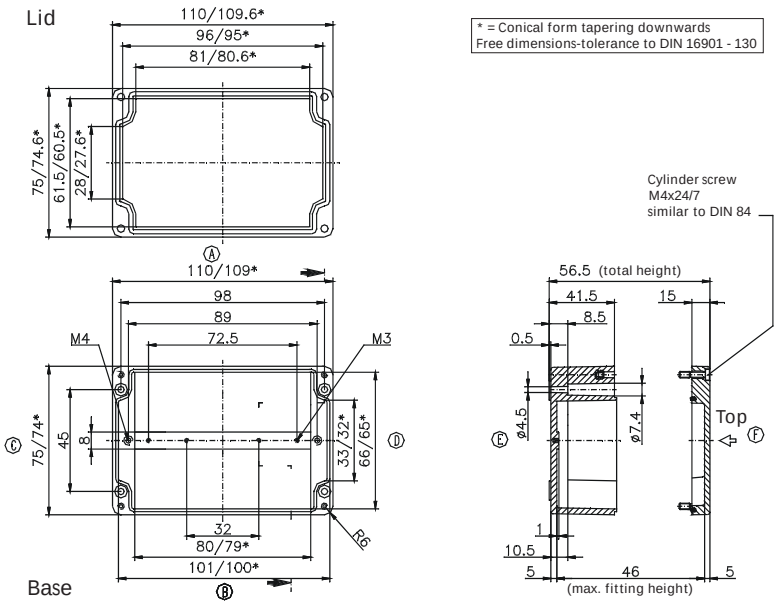

Maximum number of cable glands to ***DIN 50262****

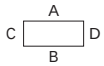

M	Corner dim.	Side A/B	Side C/D	*PG*	Corner dim.	Side A/B	Side C/D
12	17.25	10	3	7	17.25	10	3
16	25.30	4	1	9	21.85	6	1
20	27.60	3	1	11	25.30	4	1
25	37.95	2		13.5	27.60	3	1
32	48.30			16	31.05	3	1
40	60.95			21	37.95	2	
50	69.00			29	48.30		
63	74.75			36	60.95		
				42	69.00		
				48	74.75		

Type: **02.08 11 08** External dimensions: ***75 x 110 x 75 mm*** Weight: ***440 g***

DIN rail length in mm	max. fitting length in mm	Mounting plate (thickness in mm)	External mounting brackets	External hinge* set	EMC version	Allen lid screws	Silicone lid seal	Sealable lid screws
TS 15								
98	79	2	•		•	•	•	•

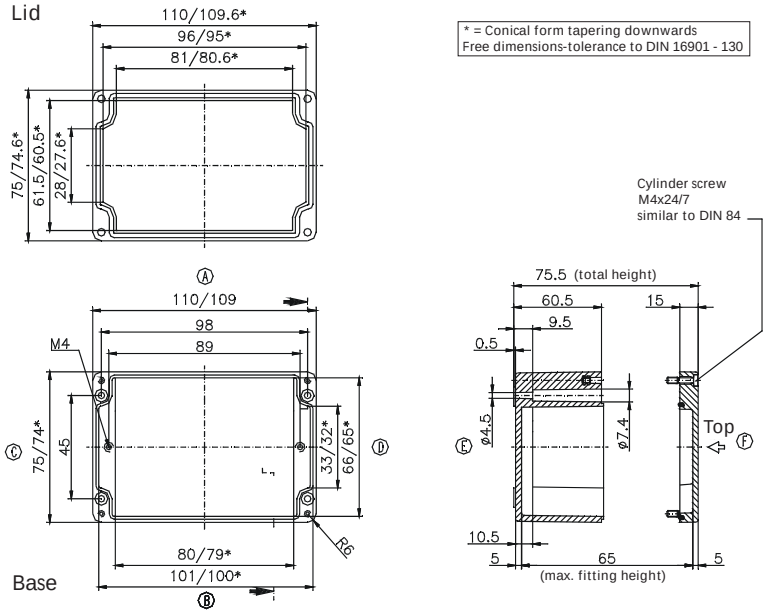

Maximum number of cable glands to ***DIN 50262****

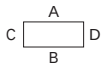

M	Corner dim.	Side A/B	Side C/D	*PG*	Corner dim.	Side A/B	Side C/D
12	17.25	15	5	7	17,25	15	5
16	25.30	6	2	9	21,85	9	3
20	27.60	6	1	11	25,30	6	2
25	37.95	2	1	13.5	27,60	6	1
32	48.30	2	1	16	31,05	5	1
40	60.95			21	37,95	2	1
50	69.00			29	48,30	2	
63	74.75			36	60,95		
				42	69,00		
				48	74,75		

* Please quote mounting side

«ЭйБиЭн»
Тел.\факс +375(17) 390-51-85 info@abn.by Тел. +375(44) 592-00-86
Тел.\факс +375(17) 390-51-86 www.abn.by

Type: **02.08 16 06** External dimensions: ***75 x 160 x 56 mm*** Weight: ***460 g***

DIN rail length in mm	max. fitting length in mm	Mounting plate (thickness in mm)	External mounting brackets	External hinge* set	EMC version	Allen lid screws	Silicone lid seal	Sealable lid screws
TS 15								
148	129	2	•		•	•	•	•

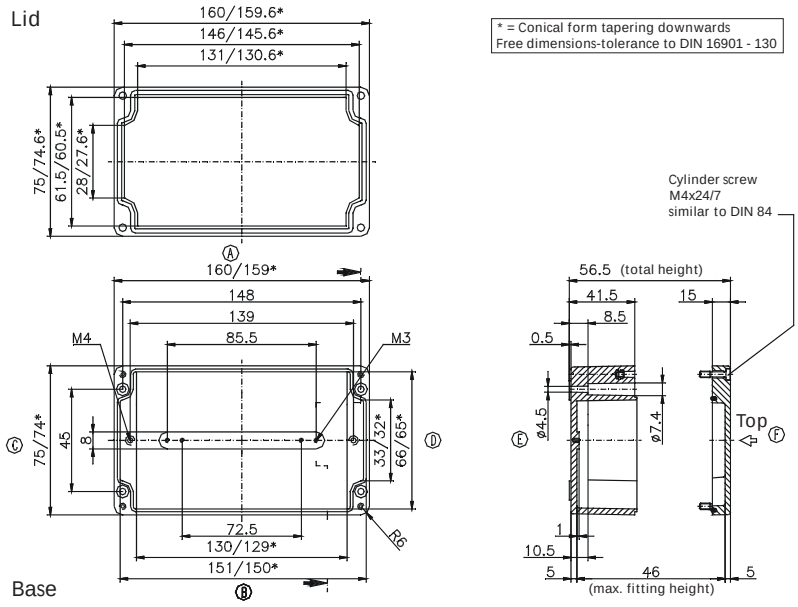

Maximum number of cable glands to ***DIN 50262****

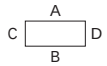

M	Corner dim.	Side A/B	Side C/D	***PG***	Corner dim.	Side A/B	Side C/D
12	17.25	16	3	7	17.25	16	2
16	25.30	6	1	9	21.85	9	1
20	27.60	5	1	11	25.30	6	1
25	37.95	3		13.5	27.60	5	1
32	48.30			16	31.05	4	1
40	60.95			21	37.95	3	
50	69.00			29	48.30		
63	74.75			36	60.95		
				42	69.00		
				48	74.75		

Type: **02.08 16 08** External dimensions: ***75 x 160 x 75 mm*** Weight: ***540 g***

DIN rail length in mm	max. fitting length in mm	Mounting plate (thickness in mm)	External mounting brackets	External hinge* set	EMC version	Allen lid screws	Silicone lid seal	Sealable lid screws
TS 15								
148	129	2	•		•	•	•	•

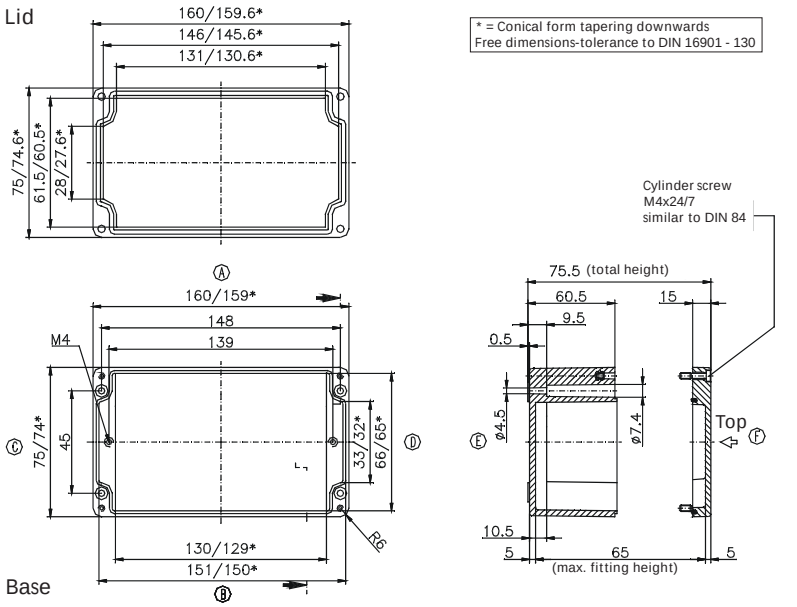

Maximum number of cable glands to ***DIN 50262****

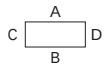

M	Corner dim.	Side A/B	Side C/D	***PG***	Corner dim.	Side A/B	Side C/D
12	17,25	18	5	7	17,25	18	5
16	25,30	8	2	9	21,85	11	3
20	27,60	8	2	11	25,30	8	2
25	37,95	3	1	13,5	27,60	8	2
32	48,30	2	1	16	31,05	5	1
40	60,95			21	37,95	3	1
50	69,00			29	48,30	2	
63	74,75			36	60,95		
				42	69,00		
				48	74,75		

* Please quote mounting side

«ЭйБиЭн»
Тел.\факс +375(17) 390-51-85 info@abn.by Тел. +375(44) 592-00-86
Тел.\факс +375(17) 390-51-86 www.abn.by

Type: **02.08 19 06** External dimensions: ***75 x 190 x 56 mm*** Weight: ***520 g***

DIN rail length in mm	max. fitting length in mm	Mounting plate (thickness in mm)	External mounting brackets	External hinge* set	EMC version	Allen lid screws	Silicone lid seal	Sealable lid screws
TS 15								
174	159	2	•		•	•	•	•

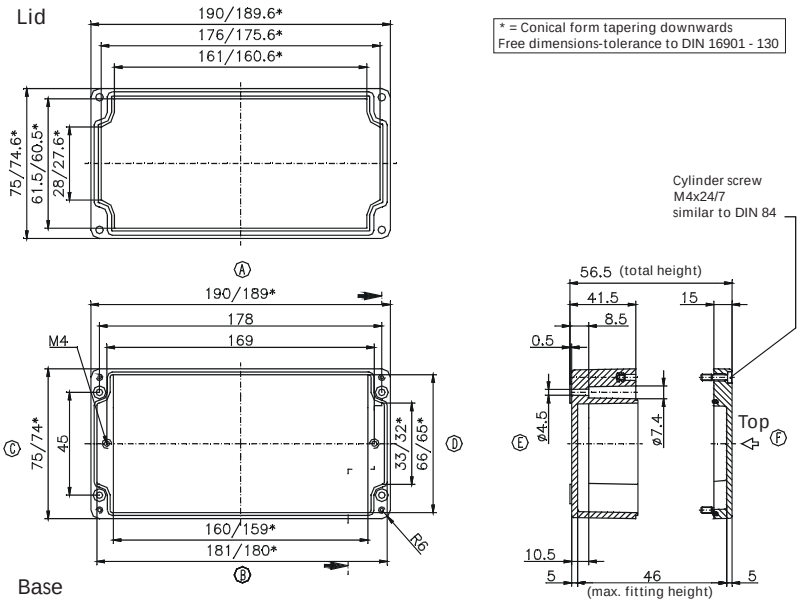

Maximum number of cable glands to ***DIN 50262****

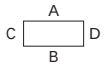

M	Corner dim.	Side A/B	Side C/D	*PG*	Corner dim.	Side A/B	Side C/D
12	17.25	20	4	7	17.25	20	4
16	25.30	8	1	9	21.85	15	2
20	27.60	7	1	11	25.30	8	1
25	37.95	4	1	13.5	27.60	7	1
32	48.30			16	31.05	6	1
40	60.95			21	37.95	4	
50	69.00			29	48.30		
63	74.75			36	60.95		
				42	69.00		
				48	74.75		

Type: **02.08 19 08** External dimensions: ***75 x 190 x 75 mm*** Weight: ***620 g***

DIN rail length in mm	max. fitting length in mm	Mounting plate (thickness in mm)	External mounting brackets	External hinge* set	EMC version	Allen lid screws	Silicone lid seal	Sealable lid screws
TS 15								
174	159	2	•		•	•	•	•

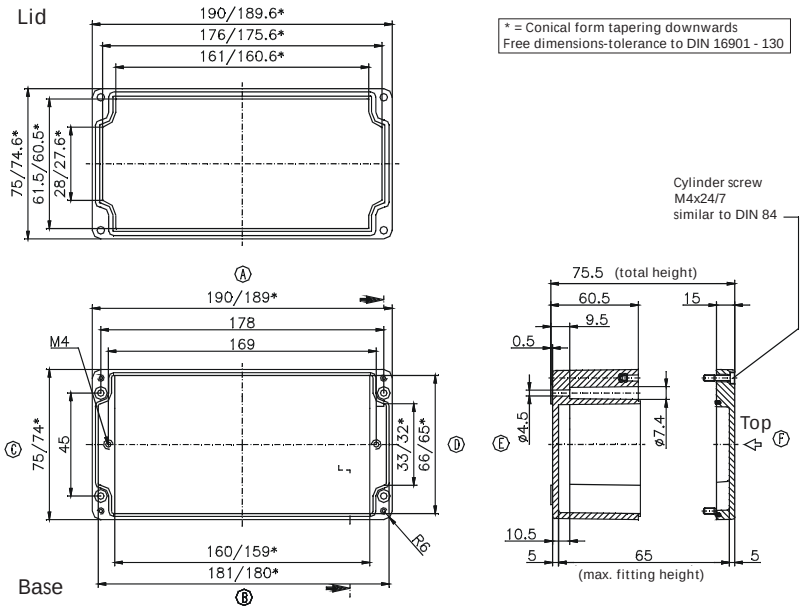

Maximum number of cable glands to ***DIN 50262****

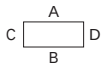

M	Corner dim.	Side A/B	Side C/D	*PG*	Corner dim.	Side A/B	Side C/D
12	17.25	28	6	7	17.25	27	5
16	25.30	12	2	9	21.85	18	3
20	27.60	12	2	11	25.30	12	2
25	37.95	5	1	13.5	27.60	12	2
32	48.30	3	1	16	31.05	10	1
40	60.95			21	37.95	5	1
50	69.00			29	48.30	3	
63	74.75			36	60.95		
				42	69.00		
				48	74.75		

* Please quote mounting side

«ЭйБиЭн»
Тел.\факс +375(17) 390-51-85 info@abn.by Тел. +375(44) 592-00-86
Тел.\факс +375(17) 390-51-86 www.abn.by

Type: **02.08 23 06** External dimensions: ***75 x 230 x 56 mm*** Weight: ***730 g***

DIN rail length in mm	max. fitting length in mm	Mounting plate (thickness in mm)	External mounting brackets	External hinge* set	EMC version	Allen lid screws	Silicone lid seal	Sealable lid screws
TS 15								
218	199		•		•	•	•	•

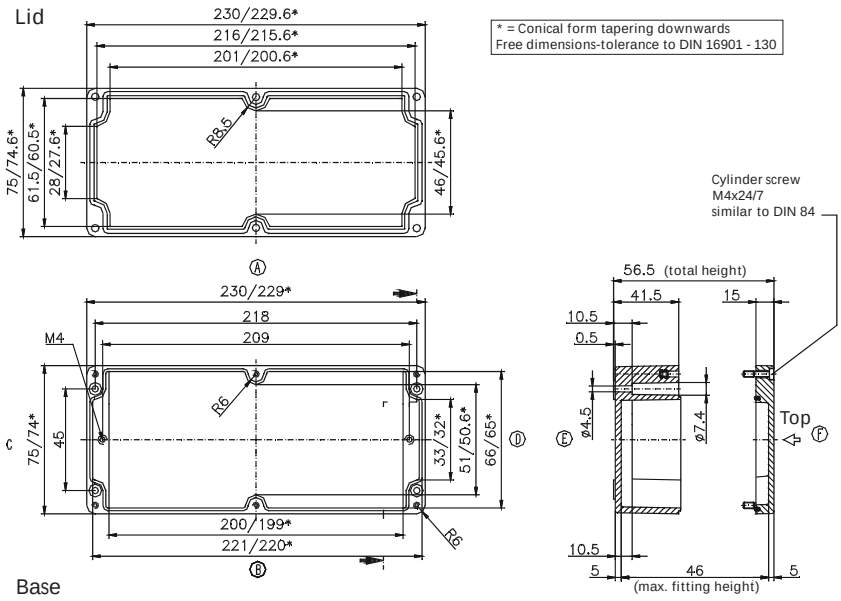

Maximum number of cable glands to ***DIN 50262****

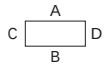

M	Corner dim.	Side A/B	Side C/D	PG	Corner dim.	Side A/B	Side C/D
12	17,25	22	3	7	17,25	20	3
16	25,30	10	1	9	21,85	14	1
20	27,60	8	1	11	25,30	8	1
25	37,95	4	1	13,5	27,60	8	1
32	48,30			16	31,05	6	1
40	60,95			21	37,95	4	1
50	69,00			29	48,30		
63	74,75			36	60,95		
				42	69,00		
				48	74,75		

Type: **02.08 23 08** External dimensions: ***75 x 230 x 75 mm*** Weight: ***900 g***

DIN rail length in mm	max. fitting length in mm	Mounting plate (thickness in mm)	External mounting brackets	External hinge* set	EMC version	Allen lid screws	Silicone lid seal	Sealable lid screws
TS 15								
218	199		•		•	•	•	•

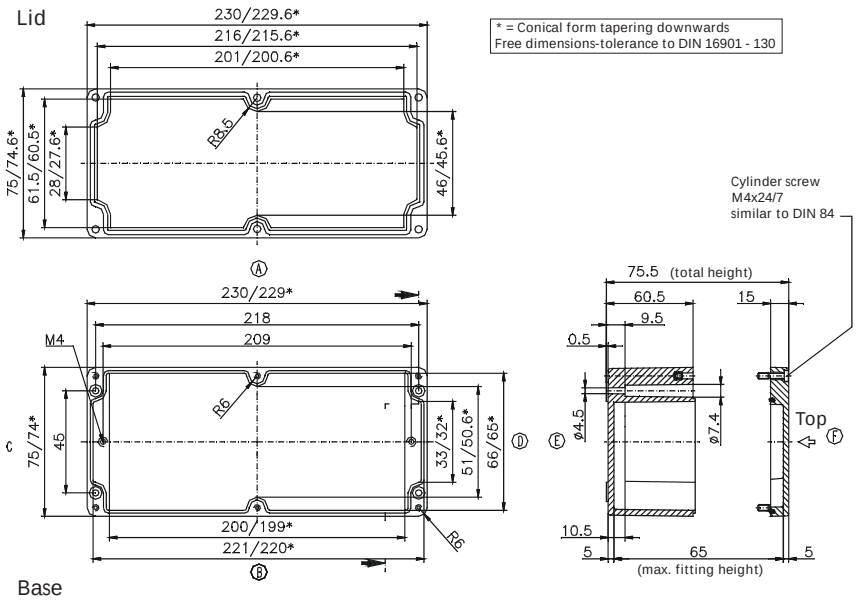

Maximum number of cable glands to ***DIN 50262****

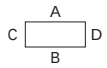

M	Corner dim.	Side A/B	Side C/D	PG	Corner dim.	Side A/B	Side C/D
12	17.25	30	6	7	17.25	30	6
16	25.30	16	2	9	21.85	18	3
20	27.60	12	2	11	25.30	16	2
25	37.95	6	1	13.5	27.60	12	2
32	48.30	4	1	16	31.05	10	1
40	60.95			21	37.95	6	1
50	69.00			29	48.30	4	
63	74.75			36	60.95		
				42	69.00		
				48	74.75		

* Please quote mounting side

«ЭйБиЭн»
Тел.\факс +375(17) 390-51-85 info@abn.by Тел. +375(44) 592-00-86
Тел.\факс +375(17) 390-51-86 www.abn.by

Type: **02.10 32 08** External dimensions: ***100 x 320 x 81 mm*** Weight: ***1210 g***

DIN rail length in mm	max. fitting length in mm	Mounting plate (thickness in mm)	External mounting brackets	External hinge* set	EMC version	Allen lid screws	Silicone lid seal	Sealable lid screws
TS 15								
304	285	1.5	•		•	•	•	•

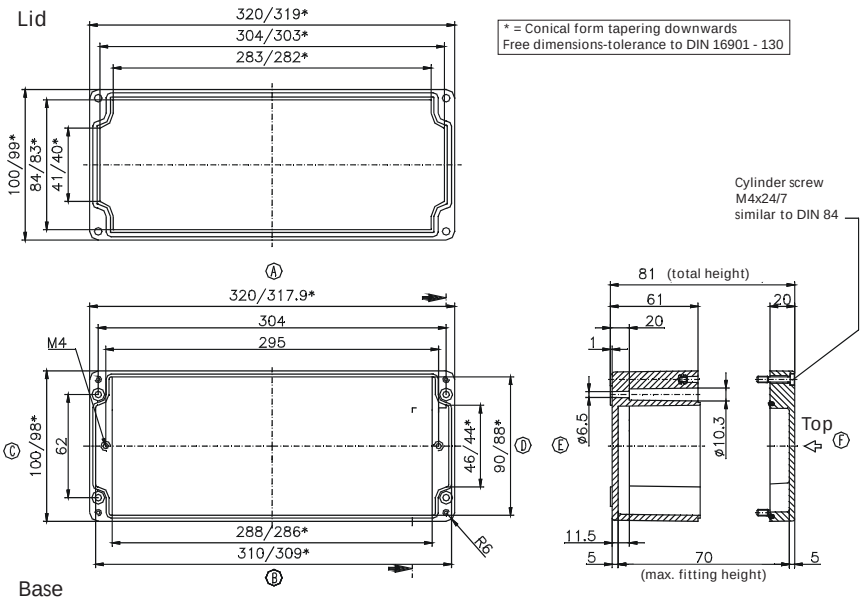

Maximum number of cable glands to ***DIN 50262****

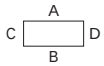

M	Corner dim.	Side A/B	Side C/D	*PG*	Corner dim.	Side A/B	Side C/D
12	17.25	48	6	7	17.25	48	6
16	25.30	23	4	9	21.85	33	4
20	27.60	20	2	11	25.30	22	4
25	37.95	9	1	13.5	27.60	20	2
32	48.30	6	1	16	31.05	17	1
40	60.95			21	37.95	9	1
50	69.00			29	48.30	6	1
63	74.75			36	60.95		
				42	69.00		
				48	74.75		

Type: **02.12 12 09** External dimensions: ***120 x 122 x 91 mm*** Weight: ***800 g***

DIN rail length in mm	max. fitting length in mm	Mounting plate (thickness in mm)	External mounting brackets	External hinge* set	EMC version	Allen lid screws	Silicone lid seal	Sealable lid screws
TS 35								
107	85	1.5	•	•	•	•	•	•

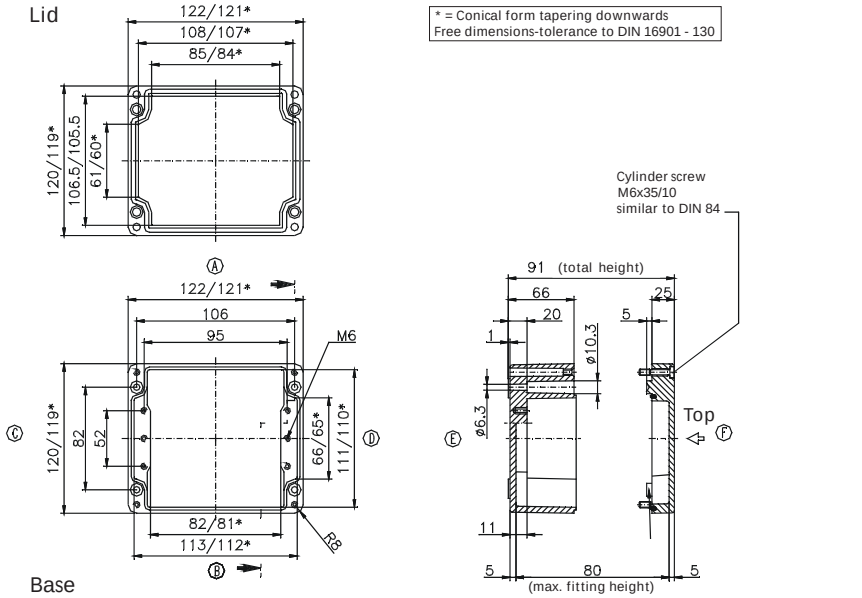

Maximum number of cable glands to ***DIN 50262****

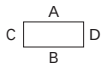

M	Corner dim.	Side A/B	Side C/D	*PG*	Corner dim.	Side A/B	Side C/D
12	17.25	18	12	7	17.25	18	12
16	25.30	8	5	9	21.85	12	6
20	27.60	6	4	11	25.30	8	5
25	37.95	3	2	13.5	27.60	6	4
32	48.30	2	1	16	31.05	6	3
40	60.95	1	1	21	37.95	3	2
50	69.00			29	48.30	2	1
63	74.75			36	60.95	1	1
				42	69.00		
				48	74.75		

* Please quote mounting side

«ЭйБиЭн»
Тел.\факс +375(17) 390-51-85 info@abn.by Тел. +375(44) 592-00-86
Тел.\факс +375(17) 390-51-86 www.abn.by

Type: **02.12 22 09** External dimensions: ***120 x 220 x 91 mm*** Weight: ***1280 g***

DIN rail length in mm	max. fitting length in mm	Mounting plate (thickness in mm)	External mounting brackets	External hinge* set	EMC version	Allen lid screws	Silicone lid seal	Sealable lid screws
TS 35								
205	183	1.5	•	•	•	•	•	•

Maximum number of cable glands to ***DIN 50262****

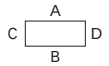

M	Corner dim.	Side A/B	Side C/D	PG	Corner dim.	Side A/B	Side C/D
12	17.25	38	12	7	17.25	36	12
16	25.30	17	5	9	21.85	24	6
20	27.60	14	4	11	25.30	15	5
25	37.95	7	2	13.5	27.60	14	4
32	48.30	4	1	16	31.05	12	3
40	60.95	3	1	21	37.95	6	2
50	69.00			29	48.30	4	1
63	74.75			36	60.95	3	1
				42	69.00		
				48	74.75		

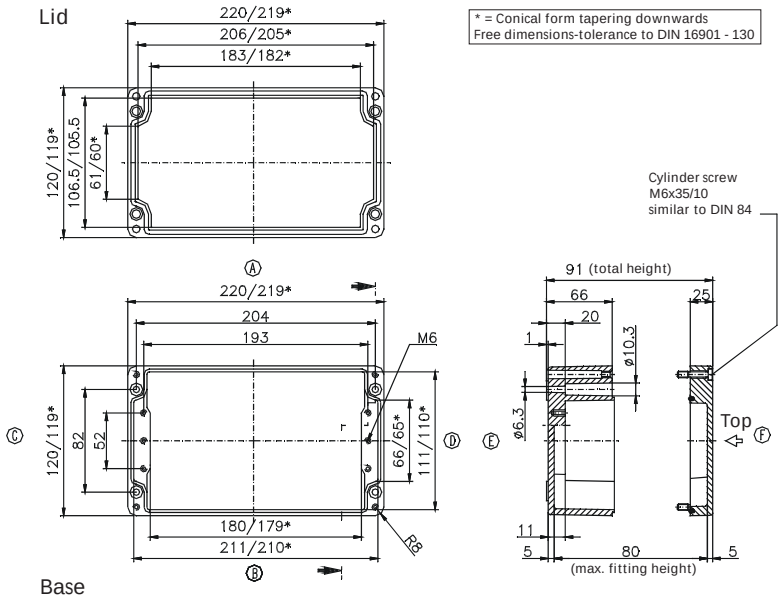

Type: **02.16 16 09** External dimensions: ***160 x 160 x 91 mm*** Weight: ***1280 g***

DIN rail length in mm	max. fitting length in mm	Mounting plate (thickness in mm)	External mounting brackets	External hinge* set	EMC version	Allen lid screws	Silicone lid seal	Sealable lid screws
TS 35								
144	122	1.5	•	•	•	•	•	•

Maximum number of cable glands to ***DIN 50262****

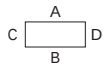

M	Corner dim.	Side A/B	Side C/D	PG	Corner dim.	Side A/B	Side C/D
12	17.25	26	18	7	17.25	26	18
16	25.30	14	8	9	21.85	15	12
20	27.60	9	6	11	25.30	12	8
25	37.95	6	3	13.5	27.60	9	6
32	48.30	3	2	16	31.05	8	6
40	60.95	2	1	21	37.95	6	3
50	69.00	2	1	29	48.30	2	2
63	74.75			36	60.95	2	1
				42	69.00	1	
				48	74.75		

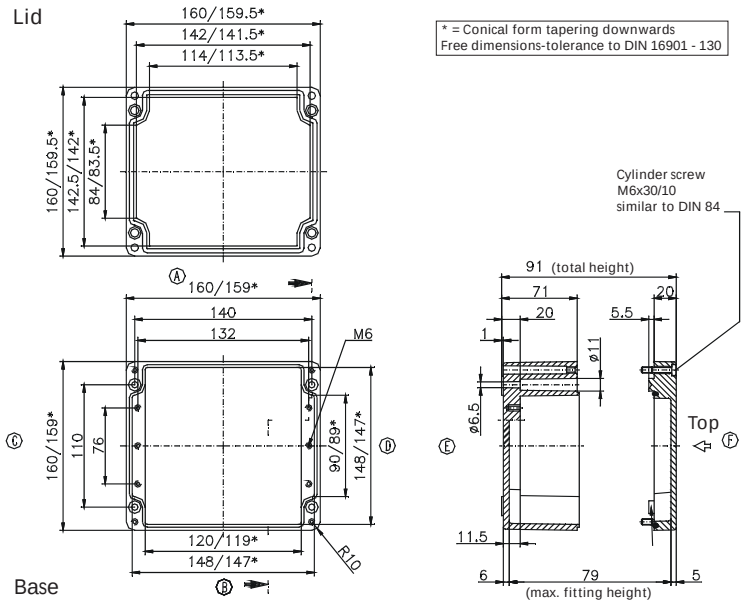

* Please quote mounting side

«ЭйБиЭн»
Тел.\факс +375(17) 390-51-85 info@abn.by Тел. +375(44) 592-00-86
Тел.\факс +375(17) 390-51-86 www.abn.by

Type: **02.16 26 09** External dimensions: ***160 x 260 x 91 mm*** Weight: ***1700 g***

DIN rail length in mm	max. fitting length in mm	Mounting plate (thickness in mm)	External mounting brackets	External hinge* set	EMC version	Allen lid screws	Silicone lid seal	Sealable lid screws
TS 35								
245	222	1.5	•	•	•	•	•	•

Maximum number of cable glands to ***DIN 50262****

A C D B

M	Corner dim.	Side A/B	Side C/D	PG	Corner dim.	Side A/B	Side C/D
12	17.25	50	16	7	17.25	50	15
16	25.30	26	8	9	21.85	30	11
20	27.60	17	6	11	25.30	21	6
25	37.95	11	3	13.5	27.60	17	6
32	48.30	5	2	16	31.05	14	5
40	60.95	3	1	21	37.95	11	3
50	69.00	3		29	48.30	5	2
63	74.75			36	60.95	3	1
				42	69.00	3	
				48	74.75		

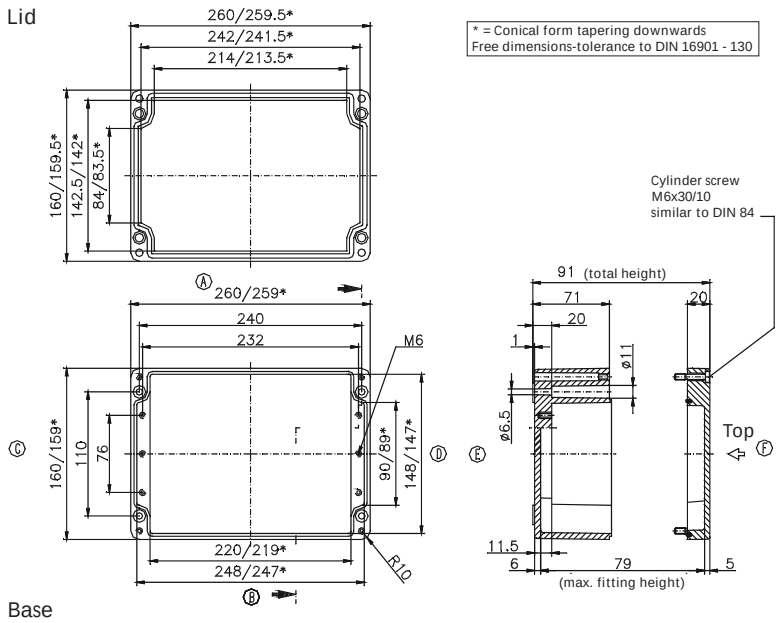

Type: **02.16 36 09** External dimensions: ***160 x 360 x 91 mm*** Weight: ***2600 g***

DIN rail length in mm	max. fitting length in mm	Mounting plate (thickness in mm)	External mounting brackets	External hinge* set	EMC version	Allen lid screws	Silicone lid seal	Sealable lid screws
TS 35								
343	322	1.5	•	•	•	•	•	•

Maximum number of cable glands to ***DIN 50262****

A C D B

M	Corner dim.	Side A/B	Side C/D	PG	Corner dim.	Side A/B	Side C/D
12	17.25	72	18	7	17.25	72	18
16	25.30	38	8	9	21.85	42	12
20	27.60	26	6	11	25.30	36	8
25	37.95	16	3	13.5	27.60	26	6
32	48.30	7	2	16	31.05	20	6
40	60.95	5	1	21	37.95	16	3
50	69.00	4	1	29	48.30	7	2
63	74.75			36	60.95	5	1
				42	69.00	4	
				48	74.75		

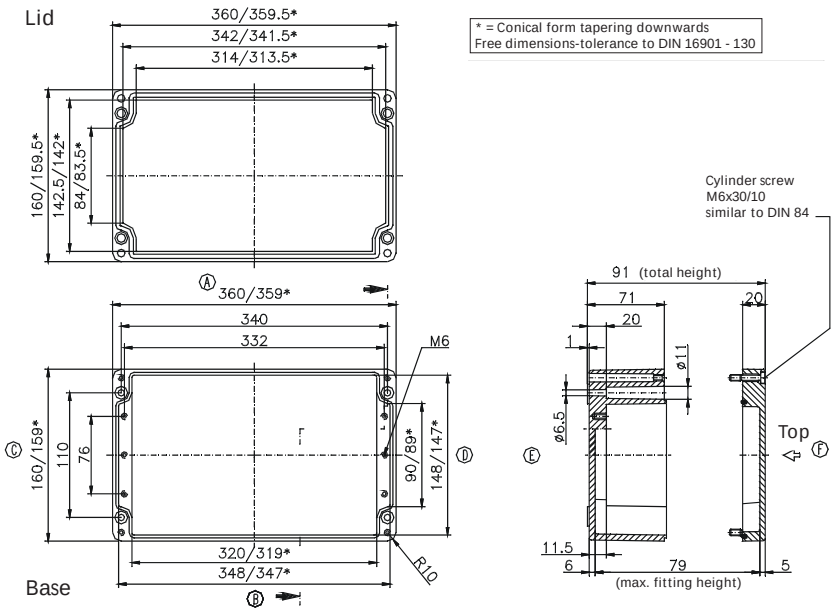

* Please quote mounting side

«ЭйБиЭн»
Тел.\факс +375(17) 390-51-85 info@abn.by Тел. +375(44) 592-00-86
Тел.\факс +375(17) 390-51-86 www.abn.by

Type: **02.16 56 09** External dimensions: ***160 x 560 x 91 mm*** Weight: ***3700 g***

DIN rail length in mm	max. fitting length in mm	Mounting plate (thickness in mm)	External mounting brackets	External hinge* set	EMC version	Allen lid screws	Silicone lid seal	Sealable lid screws
TS 35								
543	522	2	•	•	•	•	•	•

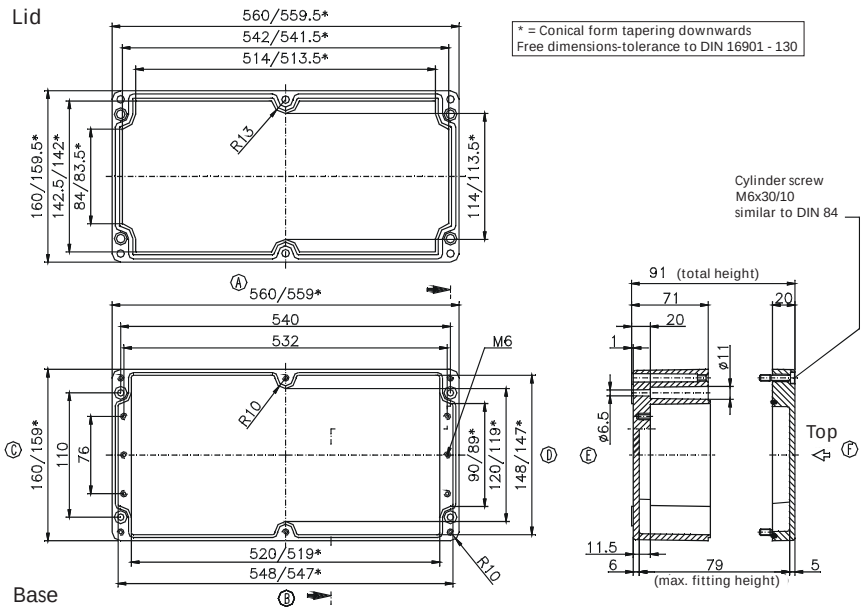

Maximum number of cable glands to ***DIN 50262****

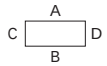

M	Corner dim.	Side A/B	Side C/D	*PG*	Corner dim.	Side A/B	Side C/D
12	17.25	112	18	7	17.25	112	18
16	25.30	58	8	9	21.85	66	12
20	27.60	40	6	11	25.30	52	8
25	37.95	24	3	13.5	27.60	40	6
32	48.30	12	2	16	31.05	32	6
40	60.95	8	1	21	37.95	22	3
50	69.00	6	1	29	48.30	10	2
63	74.75			36	60.95	8	1
				42	69.00	6	
				48	74.75		

Type: **02.25 26 12** External dimensions: ***250 x 255 x 121 mm*** Weight: ***3066 g***

DIN rail length in mm	max. fitting length in mm	Mounting plate (thickness in mm)	External mounting brackets	External hinge* set	EMC version	Allen lid screws	Silicone lid seal	Sealable lid screws
TS 35								
238	217	2	•	•	•	•	•	•

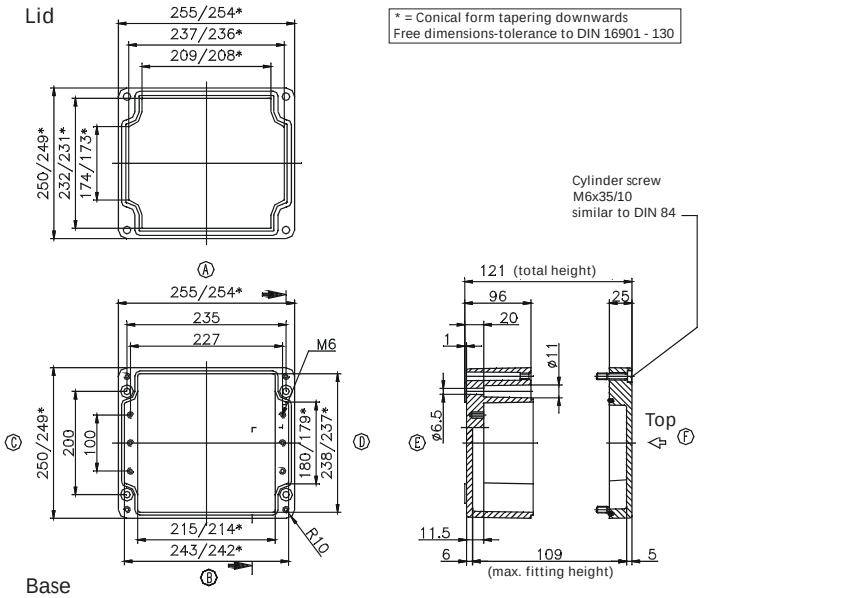

Maximum number of cable glands to ***DIN 50262****

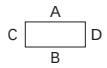

M	Corner dim.	Side A/B	Side C/D	*PG*	Corner dim.	Side A/B	Side C/D
12	17.25	69	51	7	17.25	69	51
16	25.30	32	24	9	21.85	40	32
20	27.60	24	18	11	25.30	32	24
25	37.95	12	10	13.5	27.60	24	18
32	48.30	8	7	16	31.05	21	17
40	60.95	4	3	21	37.95	12	9
50	69.00	3	3	29	48.30	8	6
63	74.75	3	2	36	60.95	4	3
				42	69.00	3	2
				48	74.75	3	2

* Please quote mounting side

«ЭйБиЭн»
Тел.\факс +375(17) 390-51-85 info@abn.by Тел. +375(44) 592-00-86
Тел.\факс +375(17) 390-51-86 www.abn.by

Type: **02.25 26 16** External dimensions: ***250 x 255 x 161 mm*** Weight: ***4060 g***

DIN rail length in mm	max. fitting length in mm	Mounting plate (thickness in mm)	External mounting brackets	External hinge* set	EMC version	Allen lid screws	Silicone lid seal	Sealable lid screws
TS 35								
238	217	2	•	•	•	•	•	•

Maximum number of cable glands to ***DIN 50262****

A C D B

M	Corner dim.	Side A/B	Side C/D	PG	Corner dim.	Side A/B	Side C/D
12	17.25	69	51	7	17.25	69	51
16	25.30	32	24	9	21.85	40	32
20	27.60	24	18	11	25.30	32	24
25	37.95	12	10	13.5	27.60	24	18
32	48.30	8	7	16	31.05	21	17
40	60.95	4	3	21	37.95	12	9
50	69.00	3	3	29	48.30	8	6
63	74.75	3	2	36	60.95	4	3
				42	69.00	3	2
				48	74.75	3	2

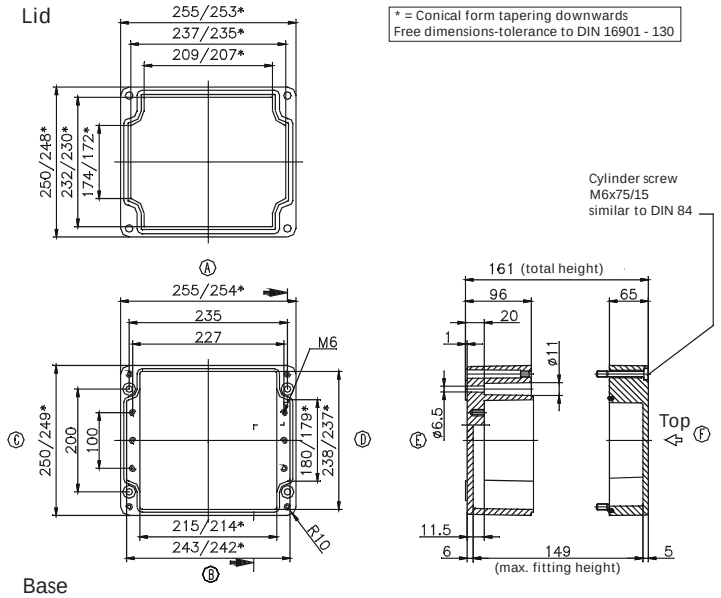

Type: **02.25 40 12** External dimensions: ***250 x 400 x 121 mm*** Weight: ***4700 g***

DIN rail length in mm	max. fitting length in mm	Mounting plate (thickness in mm)	External mounting brackets	External hinge* set	EMC version	Allen lid screws	Silicone lid seal	Sealable lid screws
TS 35								
381	362	2	•	•	•	•	•	•

Maximum number of cable glands to ***DIN 50262****

A C D B

M	Corner dim.	Side A/B	Side C/D	PG	Corner dim.	Side A/B	Side C/D
12	17.25	117	50	7	17.25	114	50
16	25.30	56	22	9	21.85	68	32
20	27.60	42	18	11	25.30	56	21
25	37.95	21	10	13.5	27.60	40	18
32	48.30	14	6	16	31.05	33	17
40	60.95	7	3	21	37.95	21	9
50	69.00	5	2	29	48.30	14	5
63	74.75	5	2	36	60.95	7	3
				42	69.00	5	2
				48	74.75	5	2

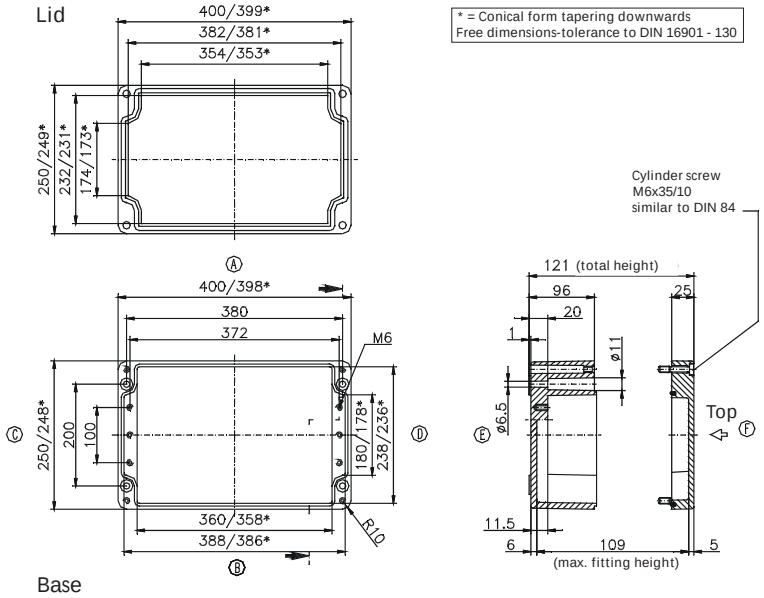

* Please quote mounting side

«ЭйБиЭн»
Тел.\факс +375(17) 390-51-85 info@abn.by Тел. +375(44) 592-00-86
Тел.\факс +375(17) 390-51-86 www.abn.by

Type: **02.25 40 16** External dimensions: **250 x 400 x 161 mm** Weight: **5440 g**

DIN rail length in mm	max. fitting length in mm	Mounting plate (thickness in mm)	External mounting brackets	External hinge* set	EMC version	Allen lid screws	Silicone lid seal	Sealable lid screws
TS 35								
381	362	2	•	•	•	•	•	•

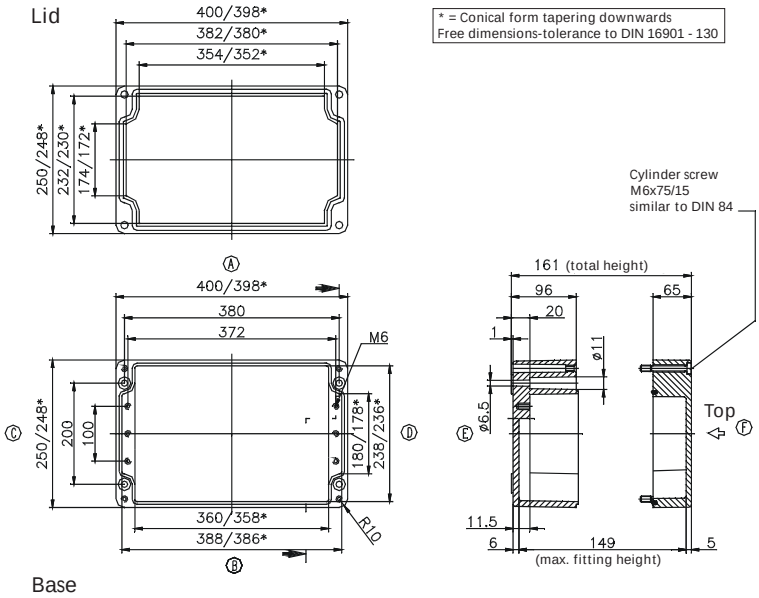

Maximum number of cable glands to ***DIN 50262****

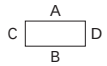

M	Corner dim.	Side A/B	Side C/D	PG	Corner dim.	Side A/B	Side C/D
12	17.25	117	50	7	17.25	114	50
16	25.30	56	24	9	21.85	68	32
20	27.60	42	18	11	25.30	56	22
25	37.95	21	10	13.5	27.60	40	18
32	48.30	14	7	16	31.05	33	17
40	60.95	7	3	21	37.95	21	9
50	69.00	5	3	29	48.30	14	6
63	74.75	5	2	36	60.95	7	3
				42	69.00	5	2
				48	74.75	5	2

Type: **02.25 60 12** External dimensions: **250 x 600 x 121 mm** Weight: **6670 g**

DIN rail length in mm	max. fitting length in mm	Mounting plate (thickness in mm)	External mounting brackets	External hinge* set	EMC version	Allen lid screws	Silicone lid seal	Sealable lid screws
TS 35								
581	562	2	•	•	•	•	•	•

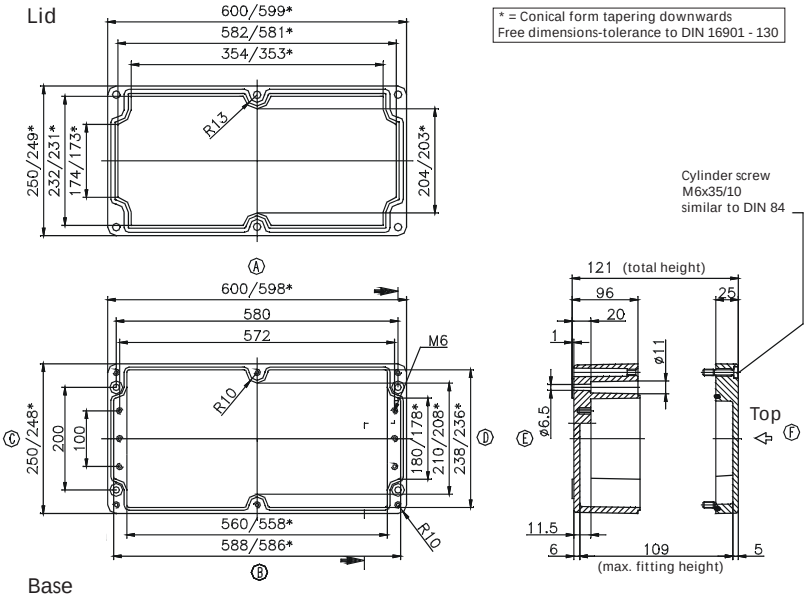

Maximum number of cable glands to ***DIN 50262****

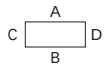

M	Corner dim.	Side A/B	Side C/D	PG	Corner dim.	Side A/B	Side C/D
12	17.25	174	50	7	17.25	174	50
16	25.30	84	24	9	21.85	100	32
20	27.60	60	18	11	25.30	80	22
25	37.95	30	10	13.5	27.60	60	18
32	48.30	20	7	16	31.05	48	17
40	60.95	10	3	21	37.95	30	9
50	69.00	8	3	29	48.30	20	6
63	74.75	6	2	36	60.95	10	3
				42	69.00	8	2
				48	74.75	6	2

* Please quote mounting side

«ЭйБиЭн»
Тел.\факс +375(17) 390-51-85 info@abn.by Тел. +375(44) 592-00-86
Тел.\факс +375(17) 390-51-86 www.abn.by

Type: **02.36 36 09** External dimensions: ***360 x 360 x 91 mm*** Weight: ***4400 g***

DIN rail length in mm	max. fitting length in mm	Mounting plate (thickness in mm)	External mounting brackets	External hinge* set	EMC version	Allen lid screws	Silicone lid seal	Sealable lid screws
TS 35								
343	320	2	•	•	•	•	•	•

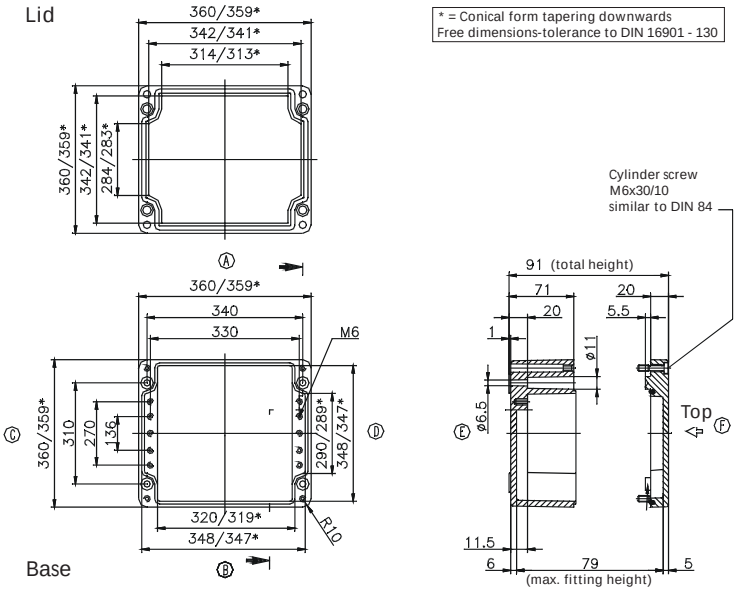

Maximum number of cable glands to ***DIN 50262****

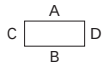

M	Corner dim.	Side A/B	Side C/D	PG	Corner dim.	Side A/B	Side C/D
12	17.25	72	52	7	17.25	72	52
16	25.30	38	24	9	21.85	42	38
20	27.60	26	20	11	25.30	33	23
25	37.95	16	10	13.5	27.60	26	20
32	48.30	7	6	16	31.05	20	18
40	60.95	5	5	21	37.95	15	9
50	69.00	4		29	48.30	7	6
63	74.75			36	60.95	5	4
				42	69.00	4	
				48	74.75		

Type: **02.41 40 12** External dimensions: ***405 x 400 x 121 mm*** Weight: ***7120 g***

DIN rail length in mm	max. fitting length in mm	Mounting plate (thickness in mm)	External mounting brackets	External hinge* set	EMC version	Allen lid screws	Silicone lid seal	Sealable lid screws
TS 35								
381	362	2	•	•	•	•	•	•

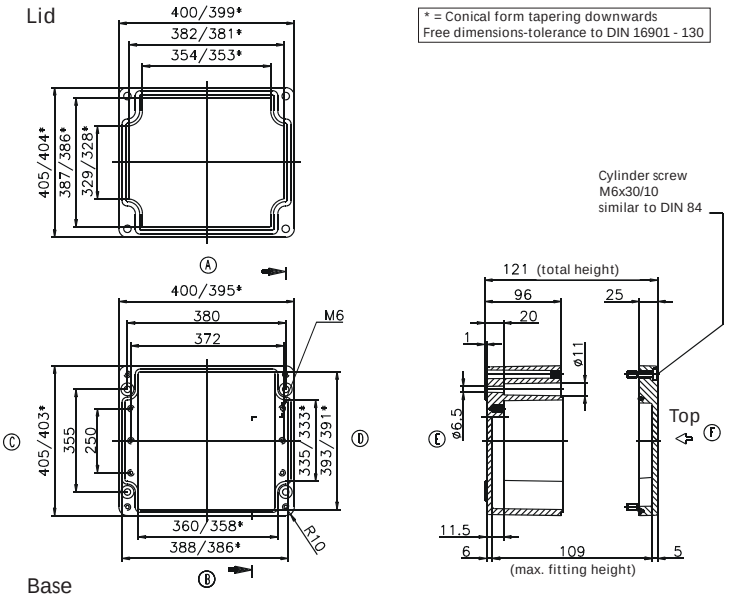

Maximum number of cable glands to ***DIN 50262****

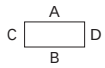

M	Corner dim.	Side A/B	Side C/D	PG	Corner dim.	Side A/B	Side C/D
12	17.25	117	95	7	17.25	114	95
16	25.30	56	46	9	21.85	68	60
20	27.60	42	36	11	25.30	56	44
25	37.95	21	18	13.5	27.60	40	36
32	48.30	14	13	16	31.05	33	32
40	60.95	7	6	21	37.95	21	18
50	69.00	5	5	29	48.30	14	12
63	74.75	5	4	36	60.95	7	6
				42	69.00	5	5
				48	74.75	5	4

* Please quote mounting side

«ЭйБиЭн»
Тел.\факс +375(17) 390-51-85 info@abn.by Тел. +375(44) 592-00-86
Тел.\факс +375(17) 390-51-86 www.abn.by

Type: ***02.41 40 20*** External dimensions: ***405 x 400 x 201 mm*** Weight: ***6650 g***

DIN rail length in mm	max. fitting length in mm	Mounting plate (thickness in mm)	External mounting brackets	External hinge* set	EMC version	Allen lid screws	Silicone lid seal	Sealable lid screws
TS 35								
381	362	2	•	•	•	•	•	•

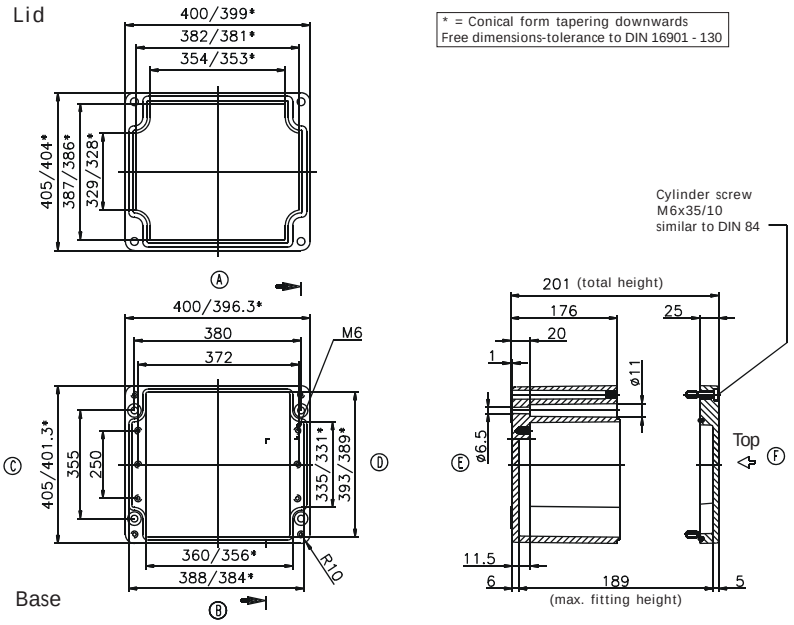

Maximum number of cable glands to ***DIN 50262****

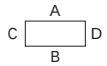

M	Corner dim.	Side A/B	Side C/D	***PG***	Corner dim.	Side A/B	Side C/D
12	17.25	210	190	7	17.25	205	190
16	25.30	98	91	9	21.85	128	120
20	27.60	88	77	11	25.30	98	91
25	37.95	45	43	13.5	27.60	88	77
32	48.30	28	26	16	31.05	66	63
40	60.95	17	15	21	37.95	45	40
50	69.00	12	11	29	48.30	28	24
63	74.75	9	8	36	60.95	17	15
				42	69.00	11	11
				48	74.75	10	8

* Please quote mounting side

«ЭйБиЭн»
Тел.\факс +375(17) 390-51-85 info@abn.by Тел. +375(44) 592-00-86
Тел.\факс +375(17) 390-51-86 www.abn.by

Applications

«ЭйБиЭн»
Тел.\факс +375(17) 390-51-85 info@abn.by Тел. +375(44) 592-00-86
Тел.\факс +375(17) 390-51-86 www.abn.by

- Polyester GRP enclosure systems for industrial application
- Two level fitting possibility
- Combination of several enclosures by connecting flange

Technical data

Material:

glassfibre reinforced duroplastic Polyester

Colour:

RAL 7000, squirrel grey

special colour on request

Ingress protection:

IP 66, EN 60529

Impact resistance:

7 Joule, EN 60079-0

Flammability:

self-extinguishing, UL 94/V0

Surface resistance:

$>10^{12}$ Ohm, IEC 60093

Disruptive strength:

18 KV/mm, IEC 60243-1

Toxicity:

halogen free

Temperature range:

PU (polyurethane) seal: -40°C to +90°C

CR (chloroprene) seal: -40°C to +100°C

VMQ (silicone) seal (optional): -60°C to +130°C

Including in delivery:

Enclosure consisting of lid and base with screws, individual inner height adjustment of mounting frame and mounting plate by 4 fixing elements

«ЭйБиЭн»
Тел.\факс +375(17) 390-51-85 info@abn.by Тел. +375(44) 592-00-86
Тел.\факс +375(17) 390-51-86 www.abn.by

Polyester CombiBox

Programme range

Order No.	Order No. EMC version	Type	Dimensions (mm)
02.01 22 15	***02.02 22 15***	Combibox 1	177 x 177 x 145
02.01 24 15	***02.02 24 15***	Combibox 2	360 x 177 x 145
02.01 44 15	***02.02 44 15***	Combibox 3	360 x 360 x 145

Accessories

02.01 99 01	CombiBox flange
02.01 99 02	CombiBox 1 mounting frame 177 x 177 mm
02.01 99 03	CombiBox 2 mounting frame 177 x 360 mm
02.01 99 04	CombiBox 3 mounting frame 360 x 360 mm
02.01 99 05	CombiBox mounting frame fastening set
02.01 99 06	CombiBox lid safety strip
02.01 99 07	CombiBox well nut set
10.06 14 85	DIN rail TS 35/7.5 160 mm
10.06 14 86	DIN rail TS 35/7.5 110 mm
10.06 14 87	DIN rail TS 35/7.5 145 mm
10.06 14 88	DIN rail TS 35/7.5 293 mm

Terminal mounting

	Phoenix															Earth conductor connections												
DIN rail TS 15	X	X	X																									
DIN rail TS 35				X	X	X	X	X	X	X	X	X	X	X	X													
Voltage (V)	250	400	500	500	800	800	800	800	800	800	1000	1000	1000	1000	1000													
Current (A)	24	32	41	17	24	32	41	57	76	101	150	150	232	309	415													
Nom. cross section (mm²)	2.5	2.5	4	1.5	2.5	2.5	4	6	10	16	35	50	95	150	240													
Terminal width (mm)	5.2	5.2	6.2	4.2	5.2	5.2	6.2	8.2	10.2	12.2	15.2	20	25	31	36													
Terminal type / Type	MBK 2,5 E	MBK 3 / E-Z	MBK 5 / E-Z	UK 1,5 N	UK 2,5 N	UK 3 N	UK 5 N	UK 6 N	UK 10 N	UK 16 N	UK 35	UKH 50	UKH 95	UKH 150	UKH 240	MSLKG 5 insulated, green/yellow	USLKG 1,5 N insulated green/yellow	USLKG 2,5 N insulated green/yellow	USLKG 6 N insulated green/yellow	USLKG 10 N insulated green/yellow	USKLG 16 N insulated green/yellow	USLKG 3 insulated green/yellow	USLKG 5 insulated green/yellow	USLKG 50 insulated green/yellow	USLKG 95 insulated green/yellow		Earthing bar 2.5 mm² with cable lug max. 10 mm²	Earthing screw M4 with cable lug max. 6 mm²	M6 with cable lug max. 35 mm²	
02.01 22 15	18	18	15	23	18	18	15	11	9	7	6																	
02.01 24 15	53	53	45	66	53	53	45	34	27	22	18						as required											
02.01 44 15	212	212	135	264	212	212	135	102	81	44	36	28	11	11														

	Weidmüller																		Earth conductor connections									
DIN rail TS 15				X	X	X	X																					
DIN rail TS 35								X	X	X	X	X	X	X	X	X	X	X										
Voltage (V)	400	400	400	250	400	250	400	500	800	800	800	1000	1000	1000	1000	1000	1000	1000										
Current (A)	32	32	32	17	17	24	32	24	24	32	41	57	76	125	192	232	269	309										
Nom. cross section (mm²)	4	4	4	1.5	1.5	2.5	4	2.5	2.5	4	6	10	16	35	70	95	120	150										
Terminal width (mm)	38	52	92	5.1	3.5	5.1	6.1	5.1	5.1	6.1	8	10	12	16	20.5	27	27	32										
Terminal type / Type	BK 4 (4-pole)	BK 6 (6-pole)	BK 12 (12-pole)	AKZ 1,5	WDU 1,5 / R 3,5	AKZ 2,5	AKZ 4	WDU 2,5 N	WDU 2,5	WDU 4	WDU 6	WDU 10	WDU 16	WDU 35	WDU 70 N	WDU 70 / 95	WDU 95 / 120 N	WDU 120 / 150	WDU 240	WPE 2.5 green/yellow	WPE 4 green/yellow	WPE 6 green/yellow	WPE 10 green/yellow	WPE 16 green/yellow	WPE 35 green/yellow	WPE 70 / 95 green/yellow	Earthing bar 2.5 mm² with cable lug max. 10 mm²	Earthing screw M4 with cable lug max. 6 mm²	M6 with cable lug max. 35 mm²
02.01 22 15	2	1	1	18	23	18	15	18	18	15	11	9	7	6														
02.01 24 15	8	4	2	53	66	53	45	53	53	45	34	27	22	18							as required							
02.01 44 15	16	8	4	212	264	212	135	212	212	135	102	81	44	36	13	10												

«ЭйБиЭн»
Тел.\факс +375(17) 390-51-85 info@abn.by Тел. +375(44) 592-00-86
Тел.\факс +375(17) 390-51-86 www.abn.by

Type: **02.01 22 15** External dimensions: ***177 x 177 x 145 mm*** Weight: ***1710 g***

DIN rail length in mm	max. fitting length in mm	Mounting plate (thickness in mm)	External mounting brackets	Lid safety strip	EMC version	Allen lid screws	Silicone lid seal	Sealable lid screws
TS 35								
152	115	1,5		•	•		•	

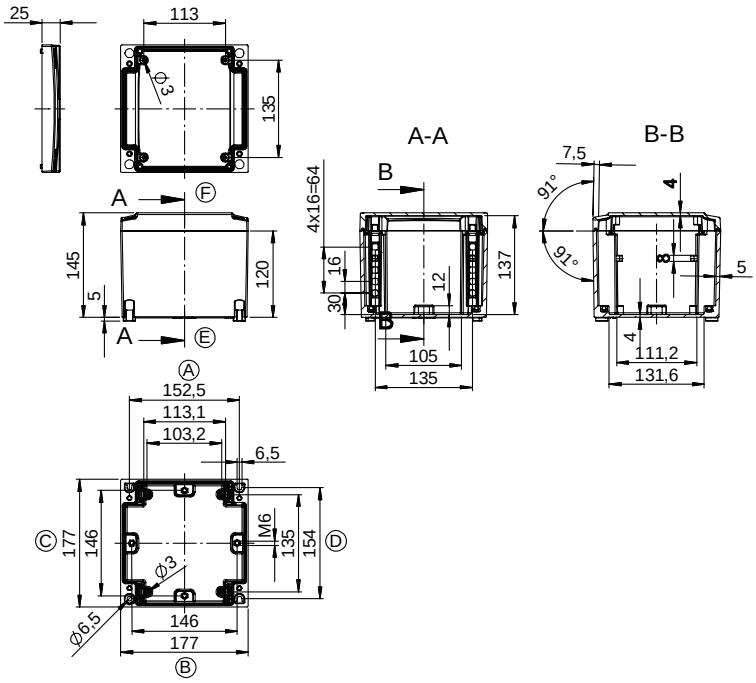

Maximum number of cable glands to ***DIN 50262****

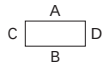

M	Corner dim.	Side A/B	Side C/D	*PG*	Corner dim.	Side A/B	Side C/D
12	17,25	36	36	7	17,25	36	36
16	25,30	16	16	9	21,85	20	20
20	27,60	12	12	11	25,30	16	16
25	37,95	6	6	13,5	27,60	12	12
32	48,30	4	4	16	31,05	10	10
40	60,95	2	2	21	37,95	6	6
50	69,00	1	1	29	48,30	4	4
63	74,75			36	60,95	2	2
				42	69,00	1	1
				48	74,75	1	1

Type: **02.01 24 15** External dimensions: ***360 x 177 x 145 mm*** Weight: ***2730 g***

DIN rail length in mm	max. fitting length in mm	Mounting plate (thickness in mm)	External mounting brackets	Lid safety strip	EMC version	Allen lid screws	Silicone lid seal	Sealable lid screws
TS 35								
333	285	1,5		•	•		•	

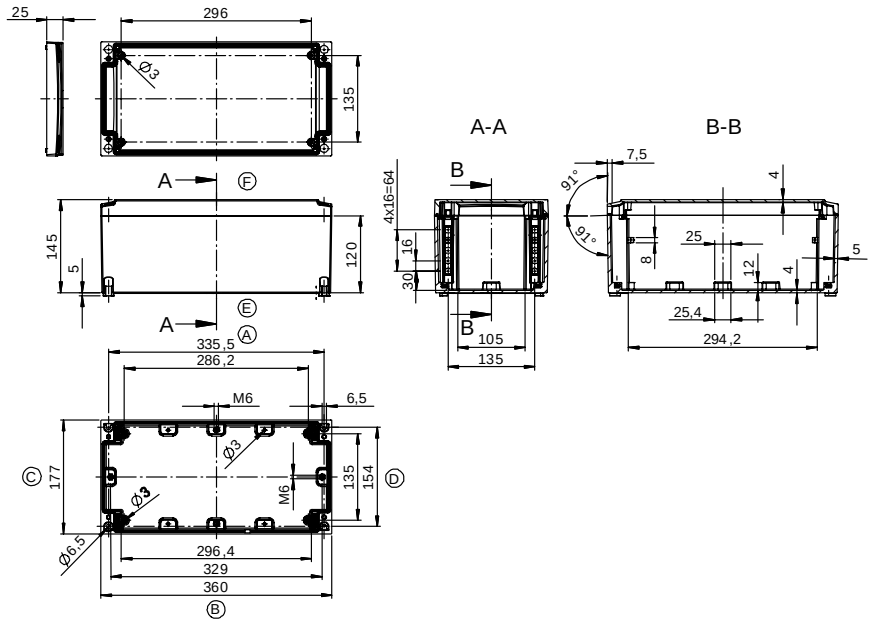

Maximum number of cable glands to ***DIN 50262****

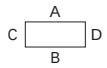

M	Corner dim.	Side A/B	Side C/D	*PG*	Corner dim.	Side A/B	Side C/D
12	17,25	109	36	7	17,25	109	36
16	25,30	50	16	9	21,85	65	20
20	27,60	40	12	11	25,30	48	16
25	37,95	21	6	13,5	27,60	40	12
32	48,30	12	4	16	31,05	32	10
40	60,95	9	2	21	37,95	21	6
50	69,00	5	1	29	48,30	12	4
63	74,75	4	1	36	60,95	7	2
				42	69,00	5	1
				48	74,75	4	1

«ЭйБиЭн»
Тел.\факс +375(17) 390-51-85 info@abn.by Тел. +375(44) 592-00-86
Тел.\факс +375(17) 390-51-86 www.abn.by

Type: **02.01 44 15** External dimensions: **177 x 360 x 145 mm** Weight: **4050 g**

DIN rail length in mm	max. fitting length in mm	Mounting plate (thickness in mm)	External mounting brackets	Lid safety strip	EMC version	Allen lid screws	Silicone lid seal	Sealable lid screws
TS 35								
333	285	1,5		•	•		•	

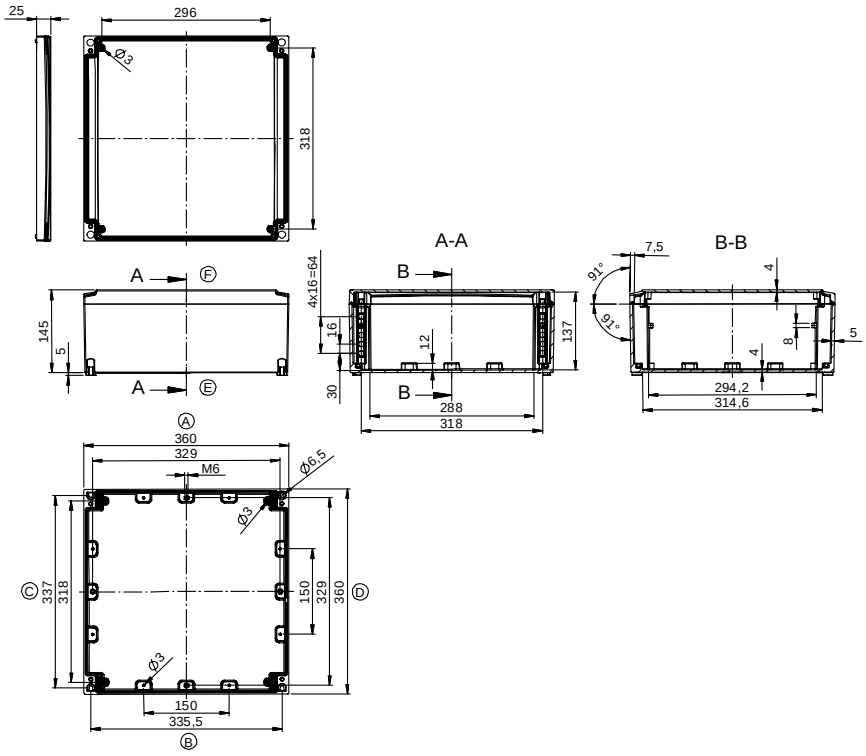

Maximum number of cable glands to ***DIN 50262****

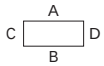

M	Corner dim.	Side A/B	Side C/D	***PG***	Corner dim.	Side A/B	Side C/D
12	17,25	109	109	7	17,25	109	109
16	25,30	50	50	9	21,85	65	65
20	27,60	40	40	11	25,30	48	48
25	37,95	21	21	13,5	27,60	40	40
32	48,30	12	12	16	31,05	32	32
40	60,95	9	9	21	37,95	21	21
50	69,00	5	5	29	48,30	12	12
63	74,75	4	4	36	60,95	7	7
				42	69,00	5	5
				48	74,75	4	4

«ЭйБиЭн»
Тел.\факс +375(17) 390-51-85 info@abn.by Тел. +375(44) 592-00-86
Тел.\факс +375(17) 390-51-86 www.abn.by

- Plastic enclosure with flange openings for automation engineering
- Combination options with other polyester flange enclosures
- Snap lock technology

Included in delivery

Plastic enclosure in glass fibre reinforced polyester, consisting of lid, seal, plastic quick-release lock screws, base with flange openings.

(Please order flange plate separately)
Threaded insert set (4 pcs.)

Technical data

Material:

glass fibre reinforced duroplastic polyester
transparent lid: polycarbonate

Colour:

RAL 7032, pebble grey

Ingress protection:

IP 66 to EN 60529

Impact resistance:

7 Joule to EN 60079-0

Flammability:

enclosure: V0 / self-extinguishing, UL 94
transparent lid: V2 / UL 94

Insulation:

fully insulated VDE 0100

Disruptive strength:

enclosure: 24KV/mm / IEC 60243-1
transparent lid: >30 KV/mm / IEC 60243-1

Toxicity:

halogen-free

Surface resistance:

enclosure: $>10^{11}$ Ohm / IEC 60093
transparent lid: $>10^{15}$ Ohm / IEC 60093

Temperature range:

PU (polyurethane) seal:
-40°C to +90°C (enclosure)
-40°C to +100°C (lid)
CR (chloroprene) seal: -40°C to +100°C
VMQ (silicone) seal: -60°C to +130°C

«ЭйБиЭн»
Тел.\факс +375(17) 390-51-85 info@abn.by Тел. +375(44) 592-00-86
Тел.\факс +375(17) 390-51-86 www.abn.by

Polyester Flange

Programme range

Order No.	W x L x H (mm)	Flange openings	Mounting plate	Front plate on stud bolt	DIN rail* TS 35	Earthing rail	Silicone lid seal
14.01 00 00	170 x 270 x 136	2	***14.00 00 11***	***14.00 00 27***	***10.06 17 21***	***10.06 21 01***	***10.05 15 01***
14.02 00 00	270 x 270 x 136	4	***14.00 00 12***	***14.00 00 28***	***10.06 17 22***	***10.06 21 01***	***10.05 15 02***
14.03 00 00	270 x 541 x 136	6	***14.00 00 13***	***14.00 00 29***	***10.06 17 23***	***10.06 21 02***	***10.05 15 03***
Version with polycarbonate transparent lid							
14.01 00 01	170 x 270 x 150	2	***14.00 00 11***	***14.00 00 27***	***10.06 17 21***	***10.06 21 01***	***10.05 15 01***
14.02 00 01	270 x 270 x 150	4	***14.00 00 12***	***14.00 00 28***	***10.06 17 22***	***10.06 21 01***	***10.05 15 02***
14.03 00 01	270 x 540 x 150	6	***14.00 00 13***	***14.00 00 29***	***10.06 17 23***	***10.06 21 02***	***10.05 15 03***

* TS 32 on request

Flange and accessories (for all types)

Blind flange (for individual machining)	***14.00 00 20***	External mounting brackets (4 pcs.)	***10.03 11 02***
Threaded flange (17 x PG 11)	***14.00 00 30***	Threaded inserts (10 pcs.), additional	***10.03 50 02***
Threaded flange (14 x PG 13,5)	***14.00 00 22***	Silicone seal for flanges	***10.05 14 02***
Threaded flange (11 x PG 16)	***14.00 00 21***	Silicone seal for connection flange	***10.05 14 03***
Threaded flange (4 x PG 16; 2 x PG 21; 1 x PG 29)	***14.00 00 23***		
Connection flange	***14.00 00 25***		
Lid hinges (2 pcs.) retrofitting for all types	***14.00 00 26***		

Terminal mounting

	Phoenix																											
DIN rail TS 35	X	X	X	X	X	X	X	X	X	X							Earth conductor connections											
Voltage (V)	500	800	800	800	800	800	800	1000	1000	1000																		
Current (A)	17	24	32	41	57	76	101	150	150	232																		
Nom. cross section (mm²)	1.5	2.5	2.5	4	6	10	16	35	50	95																		
Terminal width (mm)	4.2	5.2	5.2	6.2	8.2	10.2	12.2	15.2	20	25																		
Terminal type / Type	UK 1,5 N	UK 2,5 N	UK 3 N	UK 5 N	UK 6 N	UK 10 N	UK 16 N	UK 35	UKH 50	UKH 95							USLGK 1,5 N insulated yellow/green	USLGK 2,5 N insulated yellow/green	USLGK 6 N insulated yellow/green	USLGK 10 N insulated yellow/green	USLGK 16 N insulated yellow/green	USLGK 3 insulated yellow/green	USLGK 5 insulated yellow/green	USLGK 50 insulated yellow/green	USLGK 95 insulated yellow/green		Earthing bar 2.5 mm² with cable lug max. 10 mm²			
14.01 00 . .	55	45	45	37	28	23	19	15	11	9																	20			
14.02 00 . .	46*	37*	37*	31*	23*	19*	15*	12*	9*	7*									as required								20			
14.03 00 . .	110*	90*	90*	74*	56*	46*	38*	30*	22*	18*																	40			

* 2 DIN rails possible

	Weidmüller																											
DIN rail TS 35	X	X	X	X	X	X	X	X									Earth conductor connections											
Voltage (V)	500	800	800	800	1000	1000	1000	1000																				
Current (A)	24	24	32	41	57	76	125	192																				
Nom. cross section (mm²)	2.5	2.5	4	6	10	16	35	70																				
Terminal width (mm)	5.1	5.1	6.1	8	10	12	16	20.5																				
Terminal type / Type	WDU 2,5 N	WDU 2,5	WDU 4	WDU 6	WDU 10	WDU 16	WDU 35	WDU 70 N									WPE 2,5 green/yellow	WPE 4 green/yellow	WPE 6 green/yellow	WPE 10 green/yellow	WPE 16 green/yellow	WPE 35 green/yellow					Earthing bar 2.5 mm² with cable lug max. 10 mm²			
14.01 00 . .	47	47	39	29	23	19	14	11																			20			
14.02 00 . .	39*	39*	32*	24*	19*	16*	12*	9											as required								20			
14.03 00 . .	93*	93*	77*	58*	46*	38*	29*	23*																			40			

* 2 DIN rails possible

«ЭйБиЭн»
Тел.\факс +375(17) 390-51-85 info@abn.by Тел. +375(44) 592-00-86
Тел.\факс +375(17) 390-51-86 www.abn.by

Accessories

Blind flange
weight: 225 g

Order No.	version
14.00 00 20	without holes

Threaded flange
with pre-embossed PG holes
with metric pre-embossing on request

Order No.	version
14.00 00 30	17 x PG 11
14.00 00 22	14 x PG 13,5
14.00 00 21	11 x PG 16
14.00 00 23	4 x PG 16; 2 x PG 21; 1 x PG 29

Connection flange
to connect two polyester flange enclosures

Order No. ***14.00 00 25***

Lid hinges
set = 2 pcs., retrofittable to all polyester flange enclosures

Order No. ***14.00 00 26***

«ЭйБиЭн»
Тел.\факс +375(17) 390-51-85 info@abn.by Тел. +375(44) 592-00-86
Тел.\факс +375(17) 390-51-86 www.abn.by

Accessories

External mounting brackets
set = 4 pcs.

Order No. ***10.03 11 02***

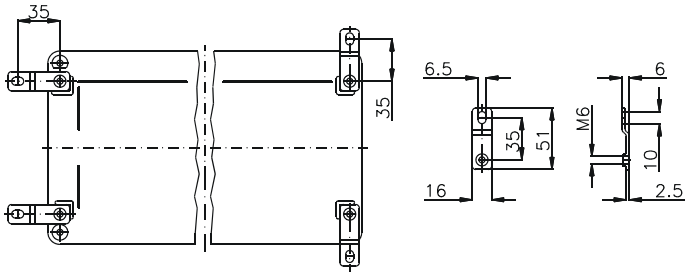

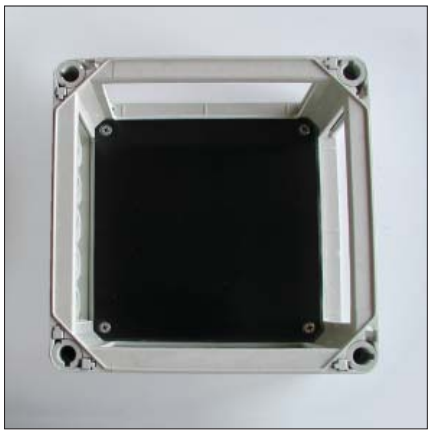

Mounting plates
for fitting electro-mechanical components

Order No.	Type
14.00 00 11	14.01
14.00 00 12	14.02
14.00 00 13	14.03

Front plate
with stud bolts and fastening screws
(for dimensions, refer to mounting plate)

Order No.	Type
14.00 00 27	14.01
14.00 00 28	14.02
14.00 00 29	14.03

«ЭйБиЭн»
Тел.\факс +375(17) 390-51-85 info@abn.by Тел. +375(44) 592-00-86
Тел.\факс +375(17) 390-51-86 www.abn.by

Type: **14.01 . .** External dimensions: ***170 x 270 x 136 mm*** Weight: ***2140 g***

DIN rail length in mm	max. fitting length in mm	Mounting plate (thickness in mm)	External mounting bracket	Lid hinges	No. of flanges			
TS 15/35								
255	240	3	•	•	2			

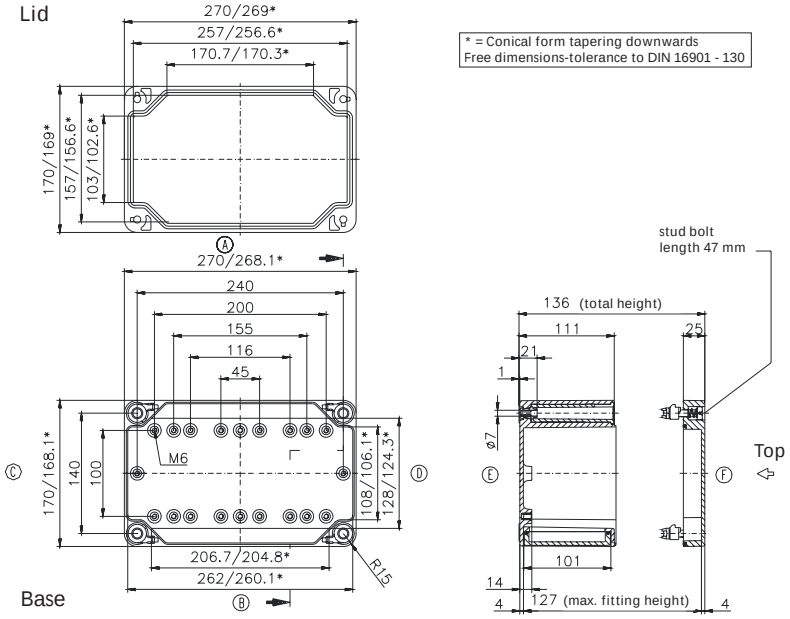

* = Conical form tapering downwards
Free dimensions-tolerance to DIN 16901 - 130

Maximum number of cable glands to ***DIN 50262****

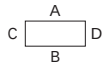

M	Corner dim.	Side A/B	Side C/D	*PG*	Corner dim.	Side A/B	Side C/D
12	17.25	63	33	7	17.25	63	33
16	25.30	28	16	9	21.85	38	20
20	27.60	22	12	11	25.30	28	14
25	37.95	12	6	13.5	27.60	22	12
32	48.30	8	4	16	31.05	18	9
40	60.95	3	2	21	37.95	11	6
50	69.00	3	1	29	48.30	8	4
63	74.75	2	1	36	60.95	3	2
				42	69.00	3	1
				48	74.75	2	1

Type: **14.02 . .** External dimensions: ***270 x 270 x 136 mm*** Weight: ***2750 g***

DIN rail length in mm	max. fitting length in mm	Mounting plate (thickness in mm)	External mounting brackets	Lid hinges	No. of flanges			
TS 15/35								
215	200	3	•	•	4			

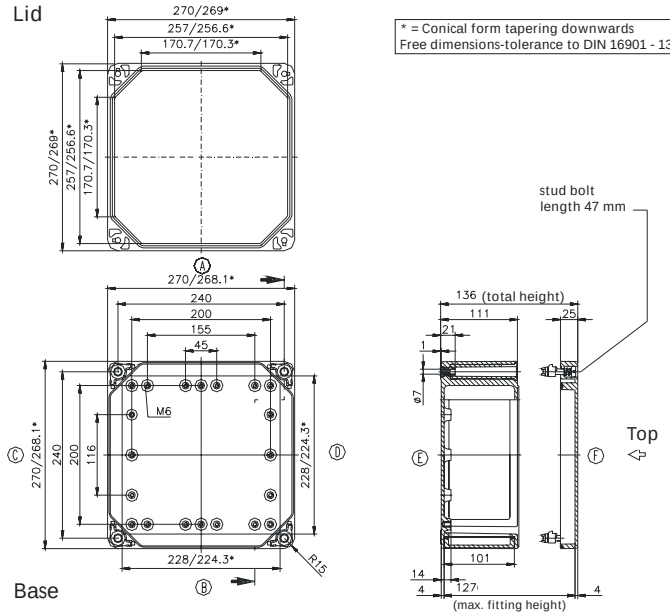

* = Conical form tapering downwards
Free dimensions-tolerance to DIN 16901 - 130

Maximum number of cable glands to ***DIN 50262****

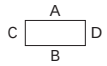

M	Corner dim.	Side A/B	Side C/D	*PG*	Corner dim.	Side A/B	Side C/D
12	17.25	63	63	7	17.25	63	63
16	25.30	28	28	9	21.85	38	38
20	27.60	22	22	11	25.30	28	28
25	37.95	12	12	13.5	27.60	22	22
32	48.30	8	8	16	31.05	18	18
40	60.95	3	3	21	37.95	11	11
50	69.00	3	3	29	48.30	8	8
63	74.75	2	2	36	60.95	3	3
				42	69.00	3	3
				48	74.75	2	2

«ЭйБиЭн»
Тел.\факс +375(17) 390-51-85 info@abn.by Тел. +375(44) 592-00-86
Тел.\факс +375(17) 390-51-86 www.abn.by

Type: ***14.03 . .*** External dimensions: ***270 x 541 x 136 mm*** Weight: ***4800 g***

DIN rail length in mm	max. fitting length in mm	Mounting plate (thickness in mm)	External mounting brackets	Lid hinges	No. of flanges			
TS 15/35								
485	470	3	•	•	6			

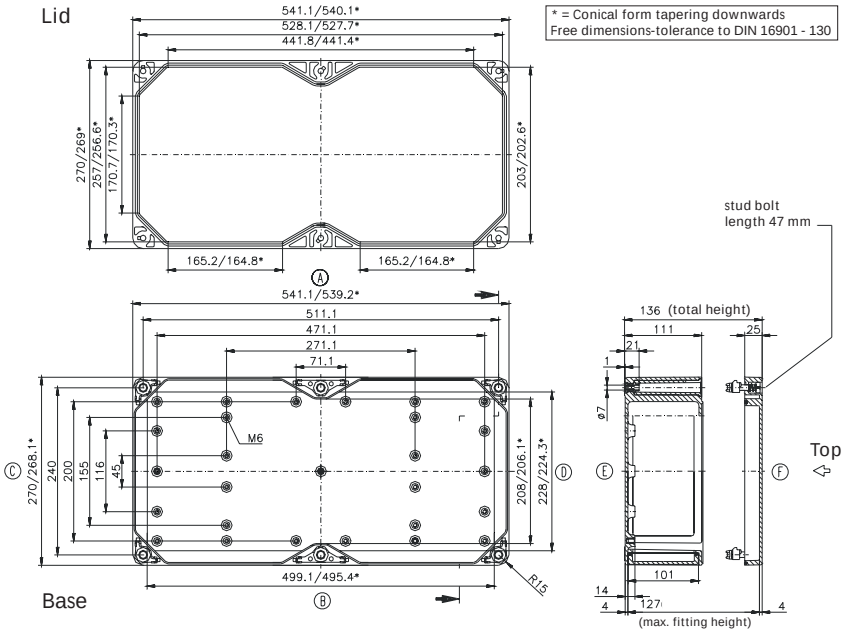

* = Conical form tapering downwards
Free dimensions-tolerance to DIN 16901 - 130

Maximum number of cable glands to ***DIN 50262****

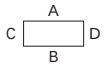

M	Corner dim.	Side A*/B*	Side C/D	***PG***	Corner dim.	Side A*/B*	Side C/D
12	17.25	63	126	7	17.25	63	126
16	25.30	28	56	9	21.85	38	76
20	27.60	22	44	11	25.30	28	56
25	37.95	12	24	13.5	27.60	22	44
32	48.30	8	16	16	31.05	18	36
40	60.95	3	6	21	37.95	11	22
50	69.00	3	6	29	48.30	8	16
63	74.75	2	4	36	60.95	3	6
				42	69.00	3	6
				48	74.75	2	4

* per flange

«ЭйБиЭн»
Тел.\факс +375(17) 390-51-85 info@abn.by Тел. +375(44) 592-00-86
Тел.\факс +375(17) 390-51-86 www.abn.by

UL® / cUL®

ABS: no UL certificate

- Light plastic enclosure for industrial applications
- Polycarbonate enclosure with standard or transparent lid
- ABS enclosure with standard lid
- Optional: EMC version coated

Included in delivery

Plastic enclosure consisting of lid, seal, incl. captive +/- stainless steel screws, base with 2 self-tapping fastening screws for internal mounting

Technical data

Material:

Polycarbonate

ABS

Colour:

RAL 7035, light grey

special colour on request

Ingress protection:

IP 66 to EN 60529 (03./09.08 23 09: IP 65)

Surface resistance:

PC: $>10^{15}$ Ohm / IEC 60093

ABS: 4×10^{14} Ohm / IEC 60093

Disruptive strength:

PC: >30 KV/mm IEC 60243-1

ABS: 24 KV/mm IEC 60243-1

Impact resistance:

7 Joule to EN 60079-0

Insulation:

fully insulated to VDE 0100

Flammability:

PC: V2 / UL 94

ABS: HB / UL 94

Toxicity:

halogen-free

Temperature range:

PC: CR (chloroprene) seal: -40°C to +100°C

ABS: CR (chloroprene) seal: -40°C to +80°C

«ЭйБиЭн»
Тел.\факс +375(17) 390-51-85 info@abn.by Тел. +375(44) 592-00-86
Тел.\факс +375(17) 390-51-86 www.abn.by

Programme range

Poly-carbonate enclosure Order No.	Polycarbonate enclosure with transparent lid	ABS enclosure	Dimensions (mm) W x L x H	External mounting brackets	Mounting plate Pertinax thickness in mm	Silicone lid seal	Small rubber table feet	PC external hinge approx. 150° [1]	Sealable lid seal [2]	EMC version aluminium flashed
03.05 05 04	**33.05 05 04**	**09.05 05 04**	50 x 52 x 35		1.5					•
03.05 07 04	**33.05 07 04**	**09.05 07 04**	50 x 65 x 35		1.5	•				•
03.08 08 06	**33.08 08 06**	**09.08 08 06**	80 x 82 x 55	•	1.5	•	•		•	•
03.08 08 09	**33.08 08 09**	**09.08 08 09**	80 x 82 x 85	•	1.5	•	•		•	•
03.08 12 06	**33.08 12 06**	**09.08 12 06**	80 x 120 x 55	•	1.5	•	•	•	•	•
03.08 12 09	**33.08 12 09**	**09.08 12 09**	80 x 120 x 85	•	1.5	•	•	•	•	•
03.08 16 06	**33.08 16 06**	**09.08 16 06**	80 x 160 x 55	•	1.5	•	•	•	•	•
03.08 16 09	**33.08 16 09**	**09.08 16 09**	80 x 160 x 85	•	1.5	•	•	•	•	•
03.08 23 09	**-**	**09.08 23 09**	80 x 230 x 85	•	1.5	•	•	•	•	•
03.12 12 06	**33.12 12 06**	**09.12 12 06**	120 x 122 x 55	•	2	•	•	•	•	•
03.12 12 09	**33.12 12 09**	**09.12 12 09**	120 x 122 x 85	•	2	•	•	•	•	•
03.12 12 11	**33.12 12 11**	**09.12 12 11**	120 x 122 x 105	•	2	•	•	•		•
03.12 16 09	**33.12 16 09**	**09.12 16 09**	120 x 160 x 90	•	2	•	•	•		•
03.12 16 14	**33.12 16 14**	**09.12 16 14**	120 x 160 x 140	•	2	•	•	•		•
03.12 20 08	**33.12 20 08**	**09.12 20 08**	120 x 200 x 75	•	2	•	•	•	•	•
03.12 20 09	**33.12 20 09**	**09.12 20 09**	120 x 200 x 90	•	2	•	•	•		•
03.12 24 10	**33.12 24 10**	**09.12 24 10**	120 x 240 x 100	•	2	•	•	•		•
03.15 20 08	**33.15 20 08**	**09.15 20 08**	150 x 200 x 75	•	2.5	•	•	•	•	•
03.16 24 09	**33.16 24 09**	**09.16 24 09**	160 x 240 x 90	•	2.5 [3]	•	•	•	•	•
03.16 24 12	**33.16 24 12**	**09.16 24 12**	160 x 240 x 120	•	2.5	•	•	•		•
03.16 36 10	**-**	**09.16 36 10**	160 x 360 x 100	•	2.5	•	•	•		•
03.20 36 15	**33.20 36 15**	**09.20 36 15**	200 x 360 x 149		2.5	•		•		•
03.23 30 09	**33.23 30 09**	**09.23 30 09**	230 x 300 x 85	•	2	•	•	•		•
03.23 30 11	**33.23 30 11**	**09.23 30 11**	230 x 300 x 110	•	2	•	•	•		•
-	**-**	**09.40 36 15**	400 x 360 x 150		2 [3]	•				•

[1]) Please quote mounting side A-D when ordering. [2]) Stainless steel [3]) Galvanized sheet steel Transparent lid for ABS enclosure not available.

Other accessories

Small table feet (for sizes up to xx.15 20 08)	**10.03 40 01**
Small table feet (for sizes up to xx.16 24 19)	**10.03 40 02**
Threaded inserts M4 (10 pcs.)	**10.03 70 04**
Threaded inserts M3 (10 pcs.)	**10.03 70 03**
Set of external hinges (2 pcs.)	**10.02 12 01**

«ЭйБиЭн»
Тел.\факс +375(17) 390-51-85 info@abn.by Тел. +375(44) 592-00-86
Тел.\факс +375(17) 390-51-86 www.abn.by

Terminal mounting

	Phoenix															Earth conductor connections													
DIN rail TS 15	X	X	X																										
DIN rail TS 35				X	X	X	X	X	X	X	X	X	X	X															
Voltage (V)	250	400	500	500	800	800	800	800	800	800	1000	1000	1000	1000															
Current (A)	24	32	41	17,5	24	32	41	57	76	101	150	150	232	309															
Nom. cross section (mm²)	2,5	3	5	1,5	2,5	2,5	4	6	10	16	35	50	95	150															
Terminal width (mm)	5,2	5,2	6,2	4,2	5,2	5,2	6,2	8,2	10,2	12,2	15,2	20	25	31															
Terminal type / Type	MBK 2,5 E	MBK 3 / E-Z	MBK 5 / E-Z	UK 1,5 N	UK 2,5 N	UK 3 N	UK 5 N	UK 6 N	UK 10 N	UK 16 N	UK 35	UKH 50	UKH 95	UKH 150		MSLKG 5 insulated, green/yellow	USLKG 1,5 N insulated green/yellow	USLKG 2,5 N insulated green/yellow	USLKG 6 N insulated green/yellow	USLKG 10 N insulated green/yellow	USLKG 16 N insulated green/yellow	USKLG 3 insulated green/yellow	USLKG 5 insulated green/yellow	USLKG 50 insulated green/yellow	USLKG 95 insulated green/yellow			Earthing bar 2.5 mm² with cable lug max. 10 mm²	Earthing screw M4 with cable lug max. 6 mm²	M6 with cable lug max. 35 mm²	
03.05 05 04																															
03.05 07 04																													1		
03.08 08 06	7	7	5	6	5																								2		
03.08 08 09	7	7	5	6	5	5	4	3	2	2	2																		2		
03.08 12 06	14	14	11	15	12																								2		
03.08 12 09	14	14	11	15	12	12	10	8	6	5	4																		2		
03.08 16 06	22	22	18	25	20																								2		
03.08 16 09	22	22	18	25	20	20	17	13	10	8	7																		2		
03.08 23 09	36	36	28	43	34	34	29	22	17	14	12																		2		
03.12 12 06	15	15	12	16	13																								2		
03.12 12 09	15	15	12	16	13	13	11	8	6	5	4																		2		
03.12 12 11	15	15	12	16	13	13	11	8	6	5	4	3																	2		
03.12 16 09	22	22	18	25	20	20	17	13	10	8	7																		2		
03.12 16 14	22	22	18	25	20	20	17	13	10	8	7	5	4															5		4	
03.12 20 08	30	30	24	35	28	28	23	17	14	12																		13		4	
03.12 20 09	30	30	24	35	28	28	23	17	14	12	9																	8		4	
03.12 24 10	38	38	30	45	36	36	30	23	18	15	12	9																16		4	
03.15 20 08	30	30	24	31	25	25	21	15	12	10																		23		4	
03.16 24 09	38	38	30	44	35	35	30	22	18	15	12																	38		4	
03.16 24 12	38	38	30	44	35	35	30	22	18	15	12	9	7															16		4	
03.16 36 10	60	60	50	71	57	57	48	36	29	24	19																	16		4	
03.20 36 15	60	60	50	71	57	57	48	36	29	24	19	15	12	9														26		4	
03.23 30 09	48	48	40	58	47	47	40	30	24	20	16																	26		4	
03.23 30 11	48	48	40	58	47	47	40	30	24	20	16	12																38		4	
09.40 36 15	61*	61*	51*	74*	59*	59*	50*	37*	30*	25*	20*	15*	12	10														23		4	
09.40 36 15	53**	53**	44**	64**	52**	52**	43**	33**	26**	22**	17**	13*	10	8														26		4	

as required

* 2 DIN rails possible = double number of terminals
** 3 DIN rails possible = triple number of terminals

«ЭйБиЭн»
Тел.\факс +375(17) 390-51-85 info@abn.by Тел. +375(44) 592-00-86
Тел.\факс +375(17) 390-51-86 www.abn.by

Terminal mounting

	Weidmüller																			Earth conductor connections								
DIN rail TS 15				X	X	X	X																					
DIN rail TS 35								X	X	X	X	X	X	X	X	X												
Voltage (V)	400	400	400	250	250	400	400	600	500	800	800	1000	1000	1000	1000	1000												
Current (A)	32	32	32	17,5	24	32	17,5	24	24	32	41	57	76	125	192	232												
Nom. cross section (mm²)	4	4	4	1,5	2,5	4	1,5	2,5	2,5	4	6	10	16	35	70	95												
Terminal width (mm)	38	52	92	5,1	5,1	6,1	3,5	5,1	5,1	6,1	8	10	11,9	16	20,5	27												
Terminal type / Type	BK 4 (4-polig)	BK 6 (6-polig)	BK 12 (12-polig)	AKZ 1,5	AKZ 2,5	AKZ 4	WDU 1,5 / R 3,5	WDU 2,5	WDU 2,5 N	WDU 4	WDU 6	WDU 10	WDU 16	WDU 35	WDU 70 N	WDU 70 / 95				WPE 2,5 green/yellow	WPE 4 green/yellow	WPE 6 green/yellow	WPE 10 green/yellow	WPE 16 green/yellow	WPE 35 green/yellow	WPE 70 / 95 green/yellow	Earthing bar 2.5 mm² with cable lug max. 10 mm²	Earthing screw M4 with cable lug max. 6 mm²	M6 with cable lug max. 35 mm²
03.05 05 04	1																												
03.05 07 04	1																											1	
03.08 08 06	1	1		5	5	4	8		6																			2	
03.08 08 09	1	1		5	5	4	8		6																			2	
03.08 12 06				12	12	10	18		13																			2	
03.08 12 09				12	12	10	18		13																			2	
03.08 16 06				20	20	17	30		21																			2	
03.08 16 09				20	20	17	30		21																			2	
03.08 23 09				35	35	29	31		35																			2	
03.12 12 06				13	13	11	20		14																			2	
03.12 12 09				13	13	11	20	14	14	12	9	7	5	4														2	
03.12 12 11				13	13	11	20	14	14	12	9	7	5	4	3													2	
03.12 16 09				20	20	17	30	21	21	18	13	11	8	6														2	
03.12 16 14				20	20	17	30	21	21	18	13	11	8	6	5												5		4
03.12 20 08				28	28	23	41	29	29	24	18	15															13		4
03.12 20 09				28	28	23	41	29	29	24	18	15	11	8													8		4
03.12 24 10				36	36	30	53	37	37	31	24	19	15	11	9												16		4
03.15 20 08				25	25	21	37	26	26	21	18	13															23		4
03.16 24 09				36	36	30	53	37	37	31	24	19	15	11													38		4
03.16 24 12				36	36	30	53	37	37	31	24	19	15	11	9												16		4
03.16 36 10				58	58	49	85	59	59	49	38	30	24	18													16		4
03.20 36 15				58	58	49	85	59	59	49	38	30	24	18	14	11											26		4
03.23 30 09				48	48	40	70	48	48	40	31	25	20	15													26		4
03.23 30 11				48	48	40	70	48	48	40	31	25	20	15	11												38		4
09.40 36 15				60*	60*	50*	88*	61*	61*	51*	39*	31*	25*	19*	15	11											23		4
09.40 36 15				52**	52**	44**	77**	53**	53**	44**	34**	27**	22*	16*	13	9											26		4

as required

* 2 DIN rails possible = double number of terminals
** 3 DIN rails possible = triple number of terminals

«ЭйБиЭн»
Тел.\факс +375(17) 390-51-85 info@abn.by Тел. +375(44) 592-00-86
Тел.\факс +375(17) 390-51-86 www.abn.by

Accessories

Mounting plate
for fitting electro-mechanical components

Type	Order No. mounting plate	Type	Order No. mounting plate
03/09/33.05 05 04	***10.01 20 01***	***03/09/33.12 16 14***	***10.01 20 07***
03/09/33.05 07 04	***10.01 20 02***	***03/09/33.12 20 08***	***10.01 20 08***
03/09/33.08 08 06	***10.01 20 03***	***03/09/33.12 20 09***	***10.01 20 08***
03/09/33.08 08 09	***10.01 20 03***	***03/09/33.12 24 10***	***10.01 20 09***
03/09/33.08 12 06	***10.01 20 04***	***03/09/33.15 20 08***	***10.01 20 10***
03/09/33.08 12 09	***10.01 20 04***	***03/09/33.16 24 09***	***10.01 20 11***
03/09/33.08 16 06	***10.01 20 05***	***03/09/33.16 24 12***	***10.01 20 11***
03/09/33.08 16 09	***10.01 20 05***	***03/09/33.16 36 10***	***10.01 20 12***
03/09/33.08 23 09	***10.01 20 16***	***03/09/33.20 36 15***	***10.01 20 13***
03/09/33.12 12 06	***10.01 20 06***	***03/09/33.23 30 09***	***10.01 20 14***
03/09/33.12 12 09	***10.01 20 06***	***03/09/33.23 30 11***	***10.01 20 14***
03/09/33.12 12 11	***10.01 20 06***	***09.40 36 15***	***10.01 20 15***
03/09/33.12 16 09	***10.01 20 07***		

External mounting brackets (set = 4 pcs.)

Order No. ***10.03 12 01***

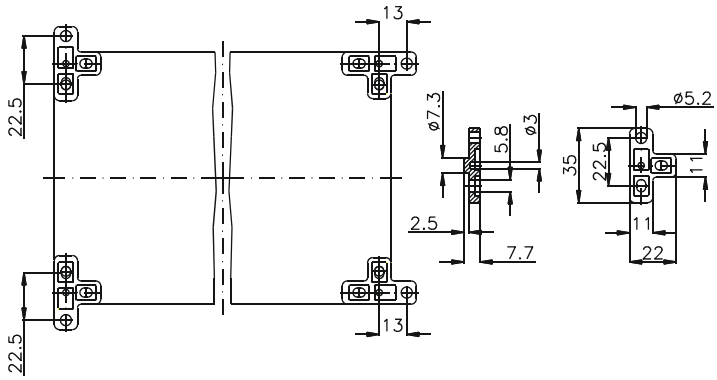

External hinge (set = 2 pcs.)

Order No. ***10.02 12 01***

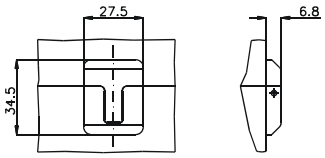

Threaded inserts

Order No.	
10.03 70 04	set of 10 pcs. M4
10.03 70 03	set of 10 pcs. M3

«ЭйБиЭн»
Тел.\факс +375(17) 390-51-85 info@abn.by Тел. +375(44) 592-00-86
Тел.\факс +375(17) 390-51-86 www.abn.by

Type: ***. . .05 05 04*** External dimensions: ***50 x 52 x 35 mm*** Weight: ***70 g***

DIN rail length in mm	max. fitting length in mm	Mounting plate (thickness in mm)	External mounting brackets	External hinge* set	EMC version	Self-adhesive rubber feet set	Silicone lid seal	Sealable lid screw in steel	
		1.5			•				

Maximum number of cable glands to ***DIN 50262****

A / B / C / D

M	Corner dim.	Side A/B	Side C/D	***PG***	Corner dim.	Side A/B	Side C/D
12	17.25	2	1	7	17.25	2	1
16	25.30			9	21.85	1	1
20	27.60			11	25.30		
25	37.95			13.5	27.60		
32	48.30			16	31.05		
40	60.95			21	37.95		
50	69.00			29	48.30		
63	74.75			36	60.95		
				42	69.00		
				48	74.75		

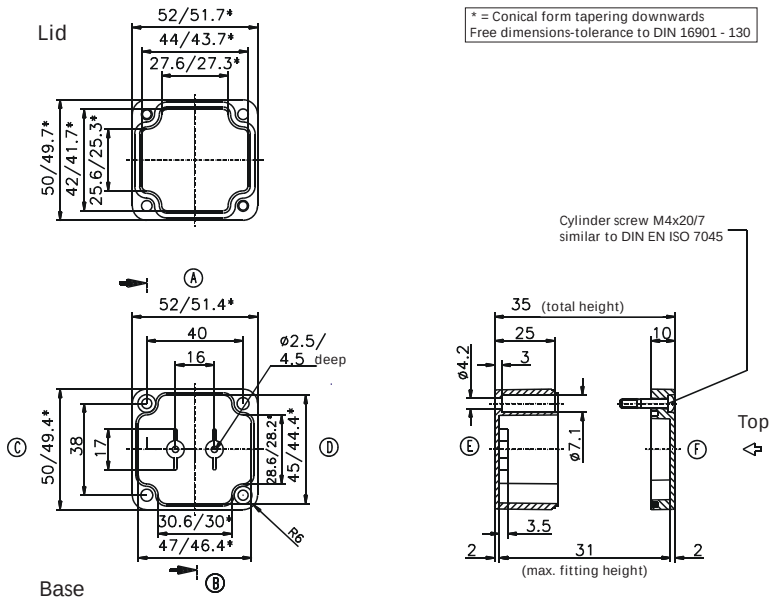

Type: ***. . .05 07 04*** External dimensions: ***50 x 65 x 35 mm*** Weight: ***74 g***

DIN rail length in mm	max. fitting length in mm	Mounting plate (thickness in mm)	External mounting brackets	External hinge* set	EMC version	Self-adhesive rubber feet set	Silicone lid seal	Sealable lid screw in steel	
TS 15									
45		1.5			•			•	

Maximum number of cable glands to ***DIN 50262****

A / B / C / D

M	Corner dim.	Side A/B	Side C/D	***PG***	Corner dim.	Side A/B	Side C/D
12	17.25	2	2	7	17.25	2	2
16	25.30			9	21.85	2	1
20	27.60			11	25.30		
25	37.95			13.5	27.60		
32	48.30			16	31.05		
40	60.95			21	37.95		
50	69.00			29	48.30		
63	74.75			36	60.95		
				42	69.00		
				48	74.75		

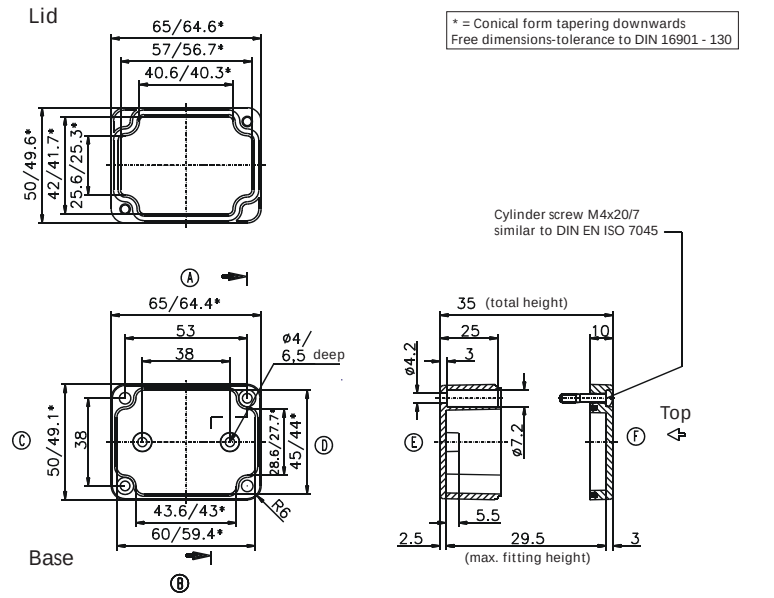

* Please quote mounting side

«ЭйБиЭн»
Тел.\факс +375(17) 390-51-85 info@abn.by Тел. +375(44) 592-00-86
Тел.\факс +375(17) 390-51-86 www.abn.by

Type: ***. . .08 08 06*** External dimensions: ***80 x 82 x 55 mm*** Weight: ***200 g***

DIN rail length in mm	max. fitting length in mm	Mounting plate (thickness in mm)	External mounting brackets	External hinge* set	EMC version	Self-adhesive rubber feet set	Silicone lid seal	Sealable lid screw in steel	
TS 15									
68	56	1.5	•		•	•	•	•	

Maximum number of cable glands to ***DIN 50262****

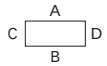

M	Corner dim.	Side A/B	Side C/D	PG	Corner dim.	Side A/B	Side C/D
12	17.25	6	4	7	17.25	6	4
16	25.30	2	2	9	21.85	3	2
20	27.60	2	1	11	25.30	2	1
25	37.95	1	1	13.5	27.60	2	1
32	48.30			16	31.05	2	1
40	60.95			21	37.95	1	1
50	69.00			29	48.30		
63	74.75			36	60.95		
				42	69.00		
				48	74.75		

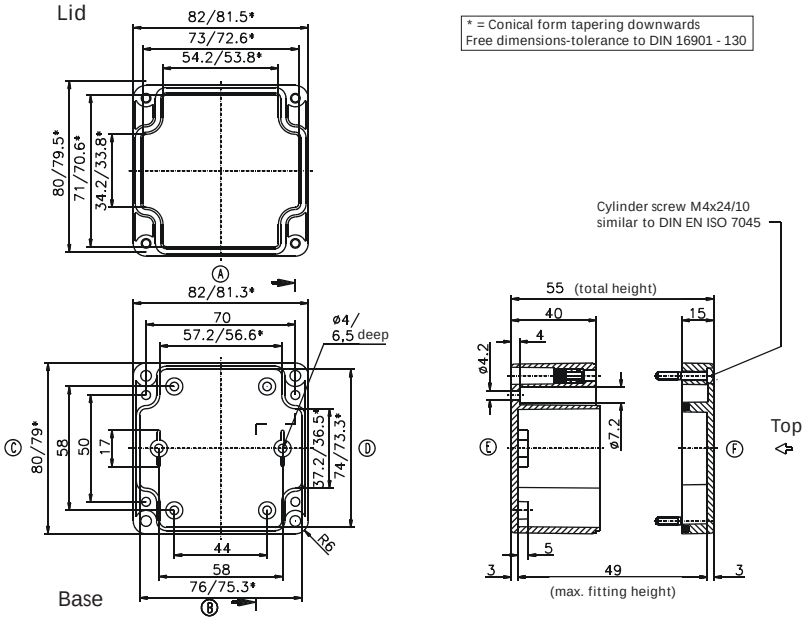

Type: ***. . .08 08 09*** External dimensions: ***80 x 82 x 85 mm*** Weight: ***250 g***

DIN rail length in mm	max. fitting length in mm	Mounting plate (thickness in mm)	External mounting brackets	External hinge* set	EMC version	Self-adhesive rubber feet set	Silicone lid seal	Sealable lid screw in steel	
TS 15									
68	56	1.5	•		•	•	•	•	

Maximum number of cable glands to ***DIN 50262****

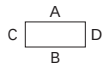

M	Corner dim.	Side A/B	Side C/D	PG	Corner dim.	Side A/B	Side C/D
12	17.25	10	6	7	17.25	10	6
16	25.30	5	2	9	21.85	6	3
20	27.60	4	2	11	25.30	5	2
25	37.95	2	1	13.5	27.60	4	2
32	48.30	1	1	16	31.05	4	2
40	60.95	1		21	37.95	1	1
50	69.00			29	48.30	1	
63	74.75			36	60.95	1	
				42	69.00		
				48	74.75		

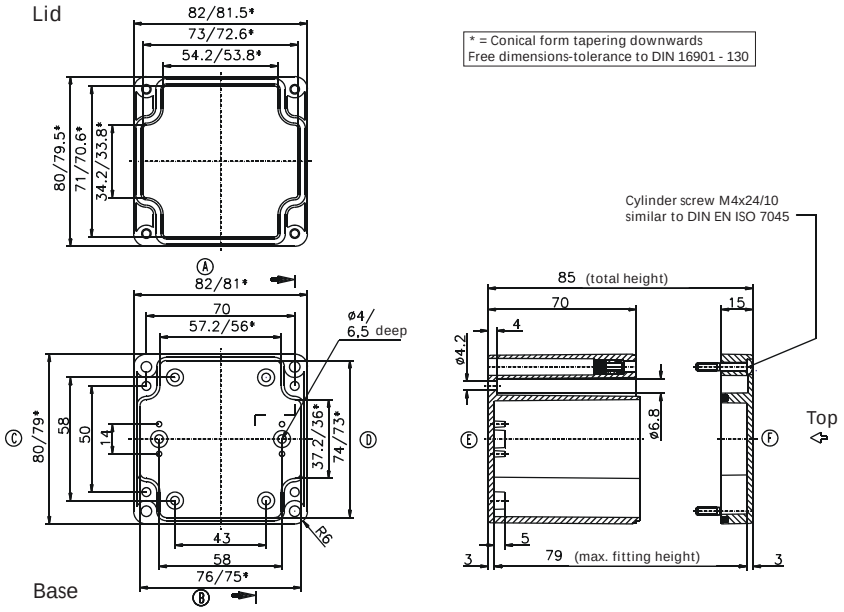

* Please quote mounting side

«ЭйБиЭн»
Тел.\факс +375(17) 390-51-85 info@abn.by Тел. +375(44) 592-00-86
Тел.\факс +375(17) 390-51-86 www.abn.by

Type: ***. . .08 12 06*** External dimensions: ***80 x 120 x 55 mm*** Weight: ***240 g***

DIN rail length in mm	max. fitting length in mm	Mounting plate (thickness in mm)	External mounting brackets	External hinge* set	EMC version	Self-adhesive rubber feet set	Silicone lid seal	Sealable lid screw in steel	
TS 15									
110	94	1.5	•	•	•	•	•	•	

Maximum number of cable glands to ***DIN 50262****

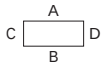

M	Corner dim.	Side A/B	Side C/D	PG	Corner dim.	Side A/B	Side C/D
12	17.25	10	3	7	17.25	10	3
16	25.30	4	1	9	21.85	6	2
20	27.60	3	1	11	25.30	4	1
25	37.95	2		13.5	27.60	3	1
32	48.30			16	31.05	3	1
40	60.95			21	37.95	2	
50	69.00			29	48.30		
63	74.75			36	60.95		
				42	69.00		
				48	74.75		

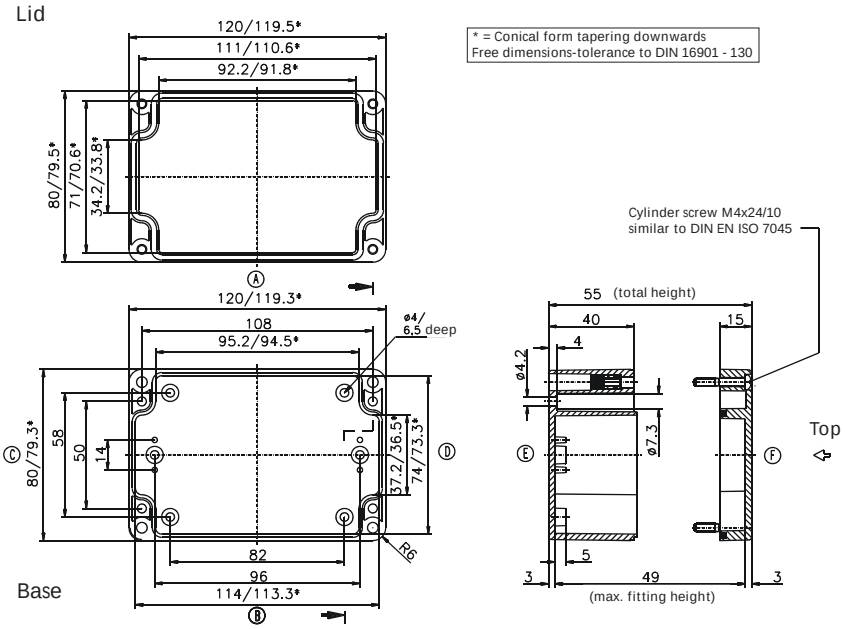

Type: ***. . .08 12 09*** External dimensions: ***80 x 120 x 85 mm*** Weight: ***280 g***

DIN rail length in mm	max. fitting length in mm	Mounting plate (thickness in mm)	External mounting brackets	External hinge* set	EMC version	Self-adhesive rubber feet set	Silicone lid seal	Sealable lid screw in steel	
TS 15									
110	94	1.5	•	•	•	•	•	•	

Maximum number of cable glands to ***DIN 50262****

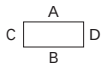

M	Corner dim.	Side A/B	Side C/D	PG	Corner dim.	Side A/B	Side C/D
12	17.25	16	6	7	17.25	16	6
16	25.30	8	2	9	21.85	11	3
20	27.60	6	2	11	25.30	8	2
25	37.95	3	1	13.5	27.60	6	2
32	48.30	2	1	16	31.05	6	2
40	60.95	1		21	37.95	3	1
50	69.00			29	48.30	2	
63	74.75			36	60.95	1	
				42	69.00		
				48	74.75		

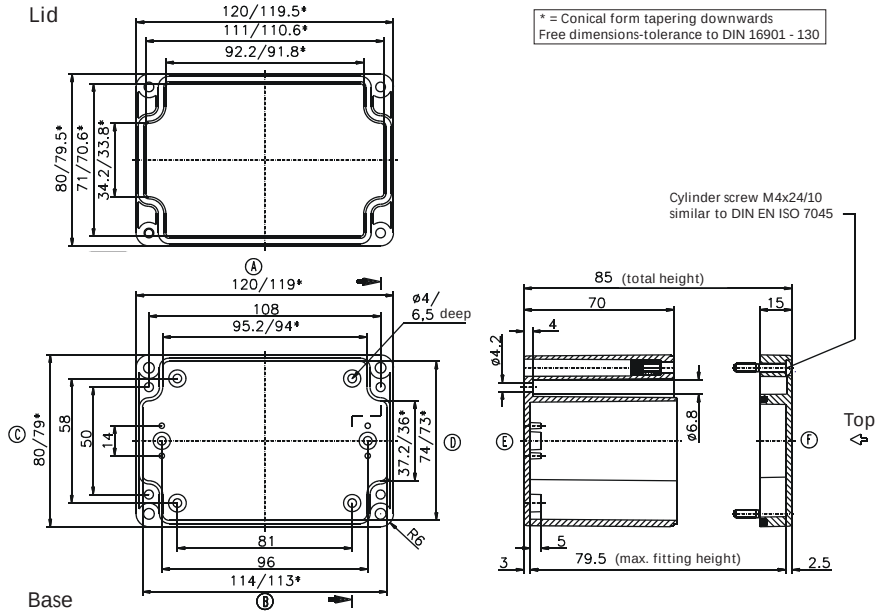

* Please quote mounting side

«ЭйБиЭн»
Тел.\факс +375(17) 390-51-85 info@abn.by Тел. +375(44) 592-00-86
Тел.\факс +375(17) 390-51-86 www.abn.by

Type: ***. . .08 16 06*** External dimensions: ***80 x 160 x 55 mm*** Weight: ***270 g***

DIN rail length in mm	max. fitting length in mm	Mounting plate (thickness in mm)	External mounting brackets	External hinge* set	EMC version	Self-adhesive rubber feet set	Silicone lid seal	Sealable lid screw in steel	
TS 15									
150	134	1.5	•	•	•	•	•	•	

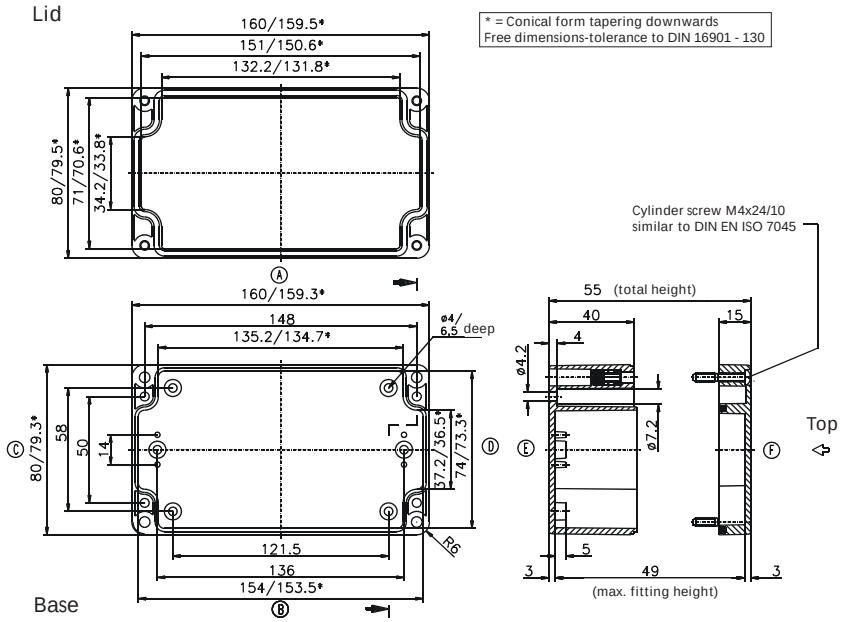

Maximum number of cable glands to ***DIN 50262****

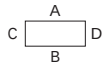

M	Corner dim.	Side A/B	Side C/D	***PG***	Corner dim.	Side A/B	Side C/D
12	17.25	16	4	7	17.25	14	4
16	25.30	6	2	9	21.85	8	2
20	27.60	5	1	11	25.30	6	1
25	37.95	3	1	13.5	27.60	5	1
32	48.30			16	31.05	4	1
40	60.95			21	37.95	3	
50	69.00			29	48.30		
63	74.75			36	60.95		
				42	69.00		
				48	74.75		

Type: ***. . .08 16 09*** External dimensions: ***80 x 160 x 85 mm*** Weight: ***340 g***

DIN rail length in mm	max. fitting length in mm	Mounting plate (thickness in mm)	External mounting brackets	External hinge* set	EMC version	Self-adhesive rubber feet set	Silicone lid seal	Sealable lid screw in steel	
TS 15									
150	134	1.5	•	•	•	•	•	•	

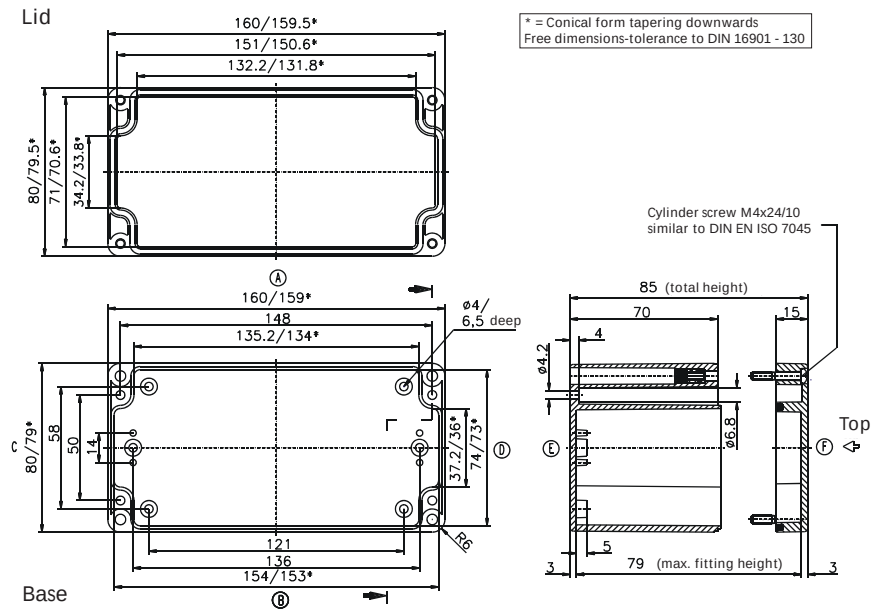

Maximum number of cable glands to ***DIN 50262****

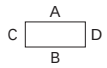

M	Corner dim.	Side A/B	Side C/D	***PG***	Corner dim.	Side A/B	Side C/D
12	17.25	28	6	7	17.25	28	6
16	25.30	14	3	9	21.85	18	4
20	27.60	9	2	11	25.30	12	2
25	37.95	5	1	13.5	27.60	9	2
32	48.30	3	1	16	31.05	8	2
40	60.95	2		21	37.95	5	1
50	69.00	2		29	48.30	3	
63	74.75			36	60.95	2	
				42	69.00	2	
				48	74.75		

* Please quote mounting side

«ЭйБиЭн»
Тел.\факс +375(17) 390-51-85 info@abn.by Тел. +375(44) 592-00-86
Тел.\факс +375(17) 390-51-86 www.abn.by

Type: ***. . .08 23 09*** External dimensions: ***80 x 230 x 85 mm*** Weight: ***600 g***

DIN rail length in mm	max. fitting length in mm	Mounting plate (thickness in mm)	External mounting brackets	External hinge* set	EMC version	Self-adhesive rubber feet set	Silicone lid seal	Sealable lid screw in steel	
TS 15									
218	204	1.5	•	•	•	•	•	•	

Maximum number of cable glands to ***DIN 50262****

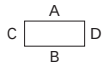

M	Corner dim.	Side A/B	Side C/D	PG	Corner dim.	Side A/B	Side C/D
12	17.25	40	6	7	17.25	40	6
16	25.30	18	3	9	21.85	27	3
20	27.60	14	2	11	25.30	17	2
25	37.95	7	1	13.5	27.60	14	2
32	48.30	4	1	16	31.05	12	2
40	60.95	3		21	37.95	7	1
50	69.00			29	48.30	4	
63	74.75			36	60.95	3	
				42	69.00		
				48	74.75		

Lid

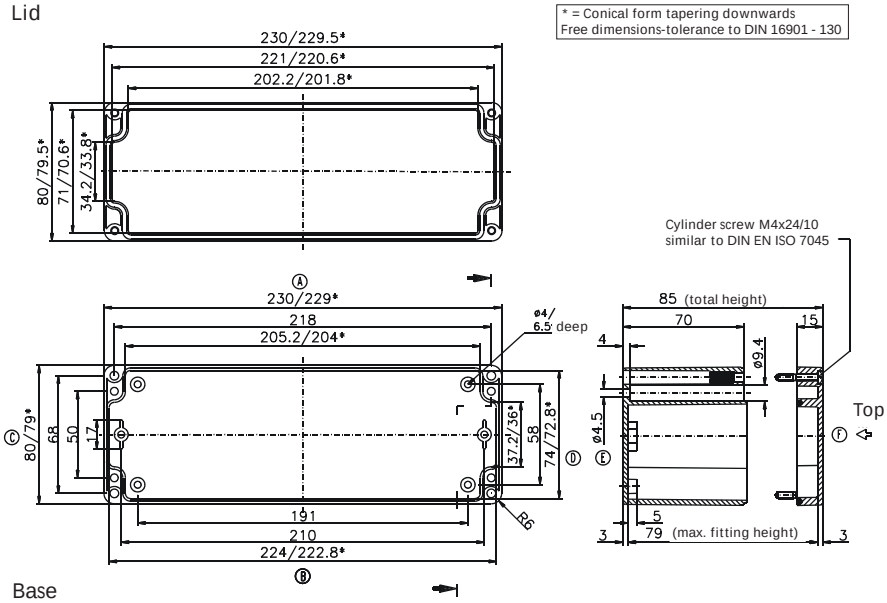

Base

Type: ***. . .12 12 06*** External dimensions: ***120 x 122 x 55 mm*** Weight: ***587 g***

DIN rail length in mm	max. fitting length in mm	Mounting plate (thickness in mm)	External mounting brackets	External hinge* set	EMC version	Self-adhesive rubber feet set	Silicone lid seal	Sealable lid screw in steel	
TS 35									
110	96	2	•	•	•	•	•	•	

Maximum number of cable glands to ***DIN 50262****

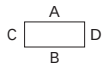

M	Corner dim.	Side A/B	Side C/D	PG	Corner dim.	Side A/B	Side C/D
12	17.25	11	8	7	17.25	11	8
16	25.30	4	3	9	21.85	6	4
20	27.60	4	3	11	25.30	4	3
25	37.95	2	2	13.5	27.60	4	3
32	48.30			16	31.05	3	2
40	60.95			21	37.95	2	2
50	69.00			29	48.30		
63	74.75			36	60.95		
				42	69.00		
				48	74.75		

Lid

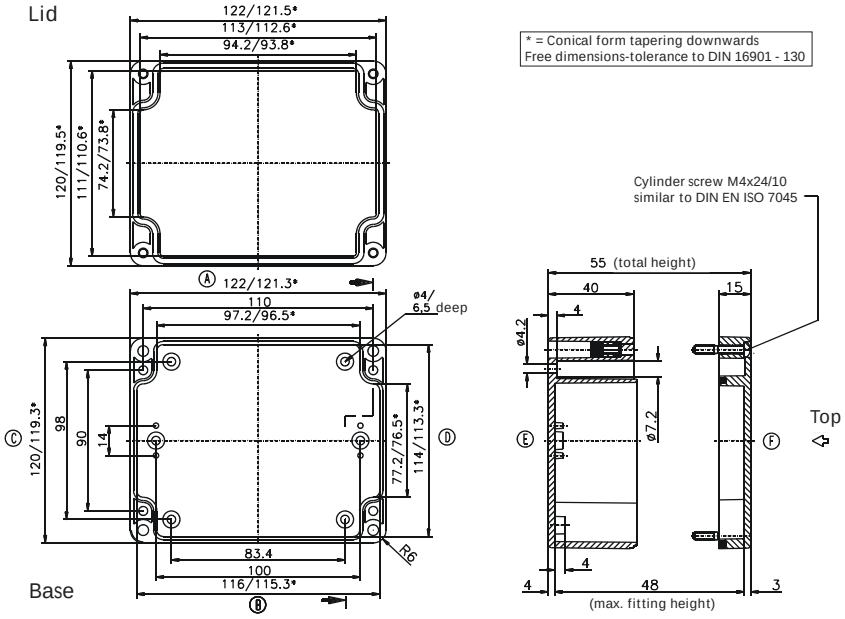

Base

* Please quote mounting side

«ЭйБиЭн»
Тел.\факс +375(17) 390-51-85 info@abn.by Тел. +375(44) 592-00-86
Тел.\факс +375(17) 390-51-86 www.abn.by

Type: ***. . .12 12 09*** External dimensions: ***120 x 122 x 85 mm*** Weight: ***430 g***

DIN rail length in mm	max. fitting length in mm	Mounting plate (thickness in mm)	External mounting brackets	External hinge* set	EMC version	Self-adhesive rubber feet set	Silicone lid seal	Sealable lid screw in steel	
TS 35									
110	96	2	•	•	•	•	•	•	

Maximum number of cable glands to ***DIN 50262****

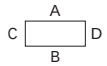

M	Corner dim.	Side A/B	Side C/D	PG	Corner dim.	Side A/B	Side C/D
12	17.25	20	14	7	17.25	20	14
16	25.30	9	6	9	21.85	12	9
20	27.60	6	5	11	25.30	9	6
25	37.95	4	2	13.5	27.60	6	5
32	48.30	2	1	16	31.05	6	4
40	60.95	1	1	21	37.95	3	2
50	69.00	1		29	48.30	2	1
63	74.75			36	60.95	1	1
				42	69.00	1	
				48	74.75		

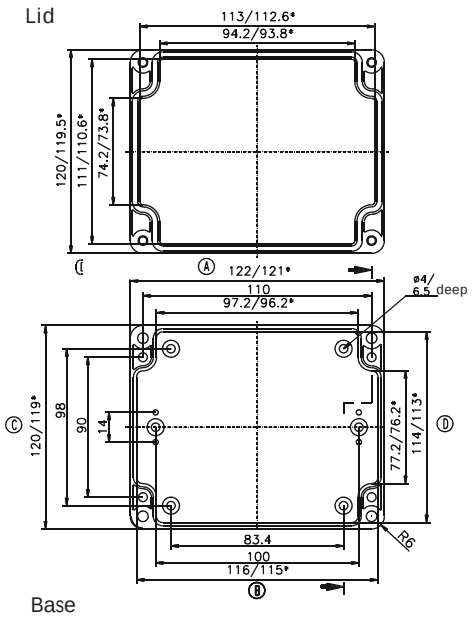

* = Conical form tapering downwards
Free dimensions-tolerance to DIN 16901 - 130

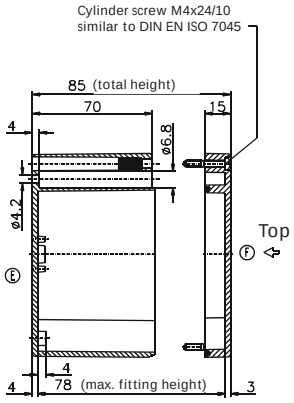

Type: ***. . .12 12 11*** External dimensions: ***120 x 122 x 105 mm*** Weight: ***560 g***

DIN rail length in mm	max. fitting length in mm	Mounting plate (thickness in mm)	External mounting brackets	External hinge* set	EMC version	Self-adhesive rubber feet set	Silicone lid seal	Sealable lid screw in steel	
TS 35									
110	96	2	•	•	•	•	•		

Maximum number of cable glands to ***DIN 50262****

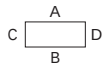

M	Corner dim.	Side A/B	Side C/D	PG	Corner dim.	Side A/B	Side C/D
12	17.25	20	14	7	17.25	20	14
16	25.30	9	6	9	21.85	12	9
20	27.60	6	5	11	25.30	9	6
25	37.95	4	2	13.5	27.60	6	5
32	48.30	2	1	16	31.05	6	4
40	60.95	1	1	21	37.95	3	2
50	69.00	1		29	48.30	2	1
63	74.75			36	60.95	1	1
				42	69.00	1	
				48	74.75		

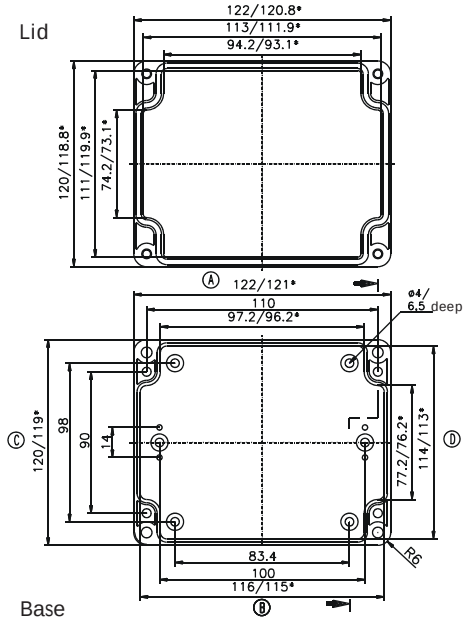

* = Conical form tapering downwards
Free dimensions-tolerance to DIN 16901 - 130

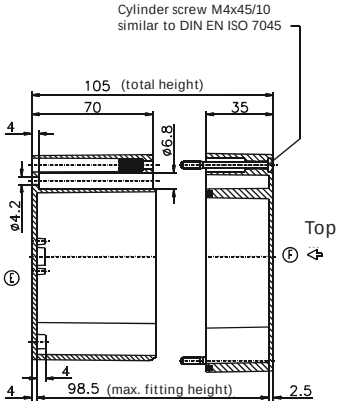

* Please quote mounting side

«ЭйБиЭн»
Тел.\факс +375(17) 390-51-85 info@abn.by Тел. +375(44) 592-00-86
Тел.\факс +375(17) 390-51-86 www.abn.by

Type: ***. . .12 16 09*** External dimensions: ***120 x 160 x 90 mm*** Weight: ***490 g***

DIN rail length in mm	max. fitting length in mm	Mounting plate (thickness in mm)	External mounting brackets	External hinge* set	EMC version	Self-adhesive rubber feet set	Silicone lid seal	Sealable lid screw in steel	
TS 35									
150	134	2	•	•	•	•	•		

Maximum number of cable glands to ***DIN 50262****

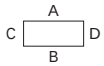

M	Corner dim.	Side A/B	Side C/D	PG	Corner dim.	Side A/B	Side C/D
12	17.25	21	12	7	17.25	21	12
16	25.30	10	6	9	21.85	12	6
20	27.60	9	4	11	25.30	10	6
25	37.95	4	2	13.5	27.60	9	4
32	48.30	3	1	16	31.05	5	3
40	60.95			21	37.95	3	2
50	69.00			29	48.30	2	1
63	74.75			36	60.95		
				42	69.00		
				48	74.75		

Lid

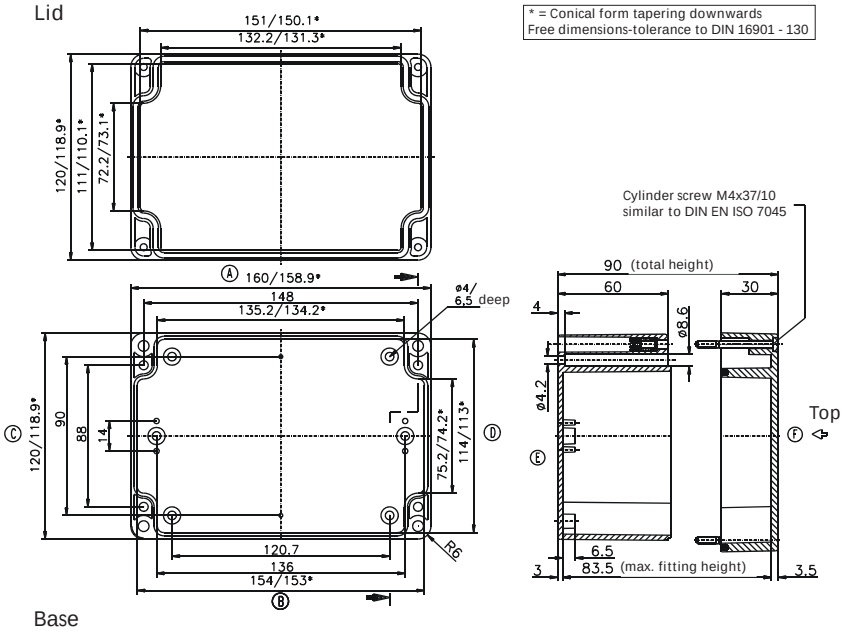

Base

Type: ***. . .12 16 14*** External dimensions: ***120 x 160 x 140 mm*** Weight: ***600 g***

DIN rail length in mm	max. fitting length in mm	Mounting plate (thickness in mm)	External mounting brackets	External hinge* set	EMC version	Self-adhesive rubber feet set	Silicone lid seal	Sealable lid screw in steel	
TS 35									
150	134	2	•	•	•	•	•		

Maximum number of cable glands to ***DIN 50262****

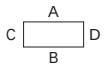

M	Corner dim.	Side A/B	Side C/D	PG	Corner dim.	Side A/B	Side C/D
12	17.25	21	12	7	17.25	21	12
16	25.30	10	6	9	21.85	12	6
20	27.60	9	4	11	25.30	10	6
25	37.95	4	2	13.5	27.60	9	4
32	48.30	3	1	16	31.05	5	3
40	60.95			21	37.95	3	2
50	69.00			29	48.30	2	1
63	74.75			36	60.95		
				42	69.00		
				48	74.75		

Lid

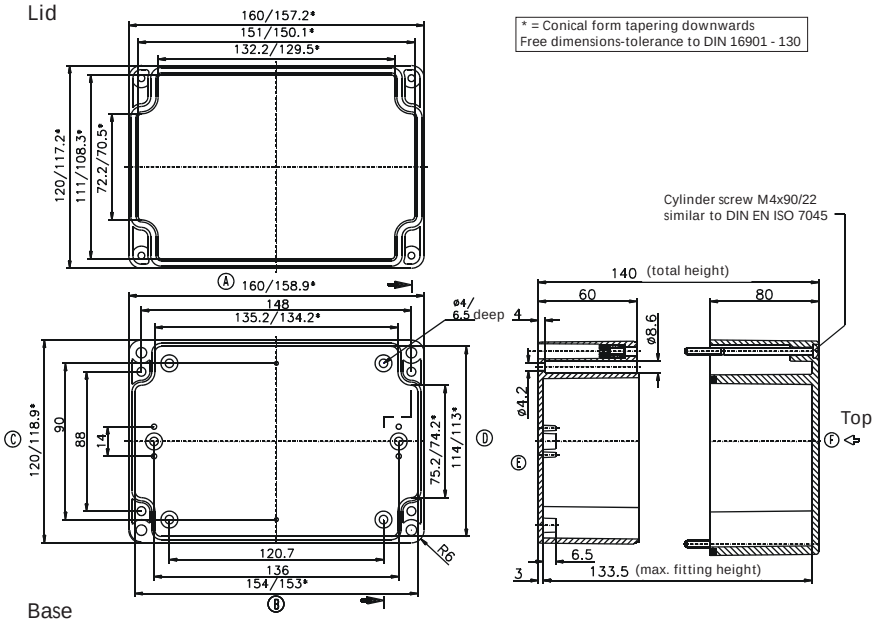

Base

* Please quote mounting side

«ЭйБиЭн»
Тел.\факс +375(17) 390-51-85 info@abn.by Тел. +375(44) 592-00-86
Тел.\факс +375(17) 390-51-86 www.abn.by

Type: ***. . .12 20 08*** External dimensions: ***120 x 200 x 75 mm*** Weight: ***492 g***

DIN rail length in mm	max. fitting length in mm	Mounting plate (thickness in mm)	External mounting brackets	External hinge* set	EMC version	Self-adhesive rubber feet set	Silicone lid seal	Sealable lid screw in steel	
TS 35									
190	174	2	•	•	•	•	•	•	

Maximum number of cable glands to ***DIN 50262****

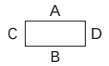

M	Corner dim.	Side A/B	Side C/D	PG	Corner dim.	Side A/B	Side C/D
12	17.25	30	15	7	17.25	30	15
16	25.30	14	6	9	21.85	20	9
20	27.60	12	6	11	25.30	12	6
25	37.95	5	3	13.5	27.60	12	6
32	48.30	3	2	16	31.05	10	4
40	60.95			21	37.95	5	2
50	69.00			29	48.30	3	2
63	74.75			36	60.95		
				42	69.00		
				48	74.75		

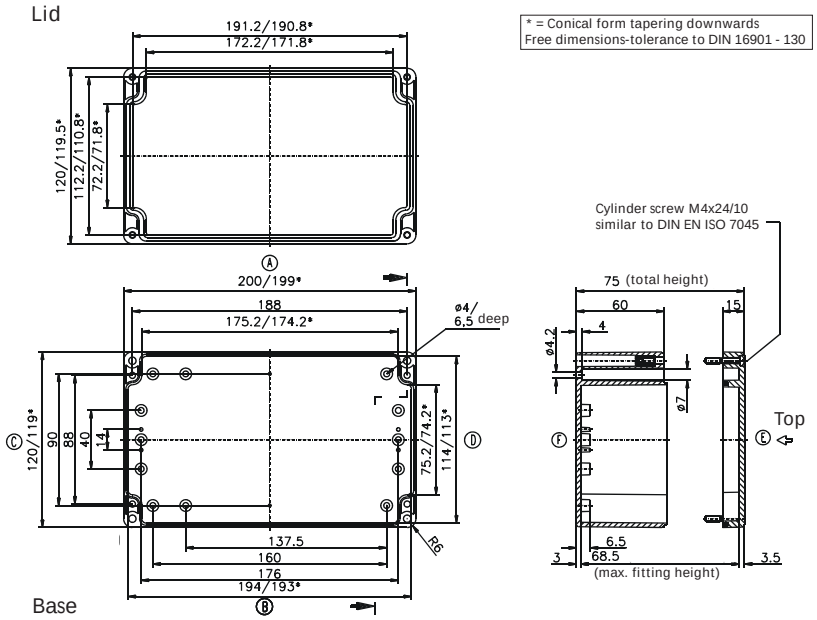

Type: ***. . .12 20 09*** External dimensions: ***120 x 200 x 90 mm*** Weight: ***600 g***

DIN rail length in mm	max. fitting length in mm	Mounting plate (thickness in mm)	External mounting brackets	External hinge* set	EMC version	Self-adhesive rubber feet set	Silicone lid seal	Sealable lid screw in steel	
TS 35									
190	174	2	•	•	•	•	•		

Maximum number of cable glands to ***DIN 50262****

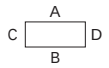

M	Corner dim.	Side A/B	Side C/D	PG	Corner dim.	Side A/B	Side C/D
12	17.25	30	12	7	17.25	30	11
16	25.30	14	6	9	21.85	18	6
20	27.60	12	4	11	25.30	12	6
25	37.95	5	2	13.5	27.60	12	4
32	48.30	3	1	16	31.05	10	3
40	60.95			21	37.95	5	2
50	69.00			29	48.30	3	1
63	74.75			36	60.95		
				42	69.00		
				48	74.75		

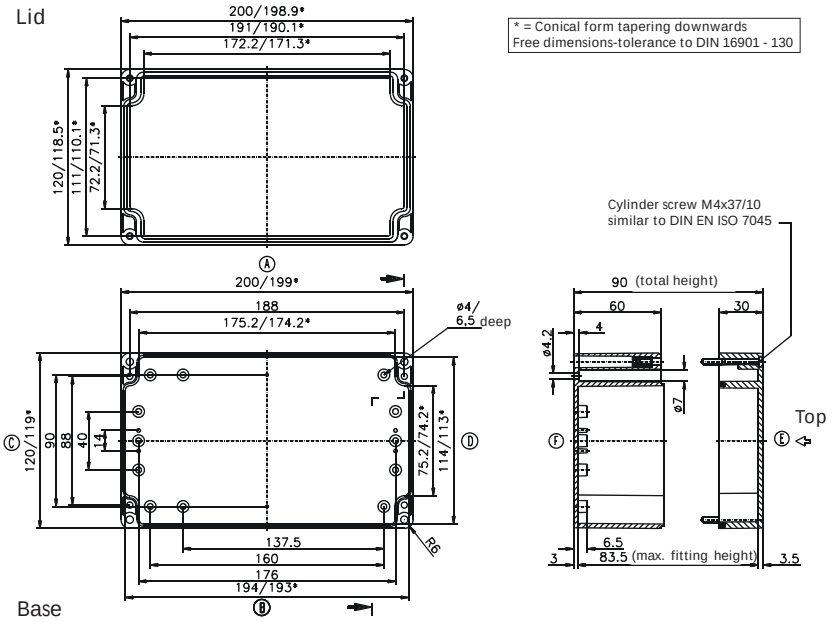

* Please quote mounting side

«ЭйБиЭн»
Тел.\факс +375(17) 390-51-85 info@abn.by Тел. +375(44) 592-00-86
Тел.\факс +375(17) 390-51-86 www.abn.by

Type: ***. . .12 24 10*** External dimensions: ***120 x 240 x 100 mm*** Weight: ***670 g***

DIN rail length in mm	max. fitting length in mm	Mounting plate (thickness in mm)	External mounting brackets	External hinge* set	EMC version	Self-adhesive rubber feet set	Silicone lid seal	Sealable lid screw in steel	
TS 35									
230	216	2	•	•	•	•	•		

Maximum number of cable glands to ***DIN 50262****

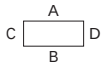

M	Corner dim.	Side A/B	Side C/D	PG	Corner dim.	Side A/B	Side C/D
12	17.25	48	16	7	17.25	48	16
16	25.30	24	8	9	21.85	30	9
20	27.60	17	5	11	25.30	21	6
25	37.95	10	3	13.5	27.60	17	5
32	48.30	5	1	16	31.05	14	5
40	60.95	3	1	21	37.95	9	3
50	69.00	3	1	29	48.30	5	1
63	74.75			36	60.95	3	1
				42	69.00	3	1
				48	74.75		

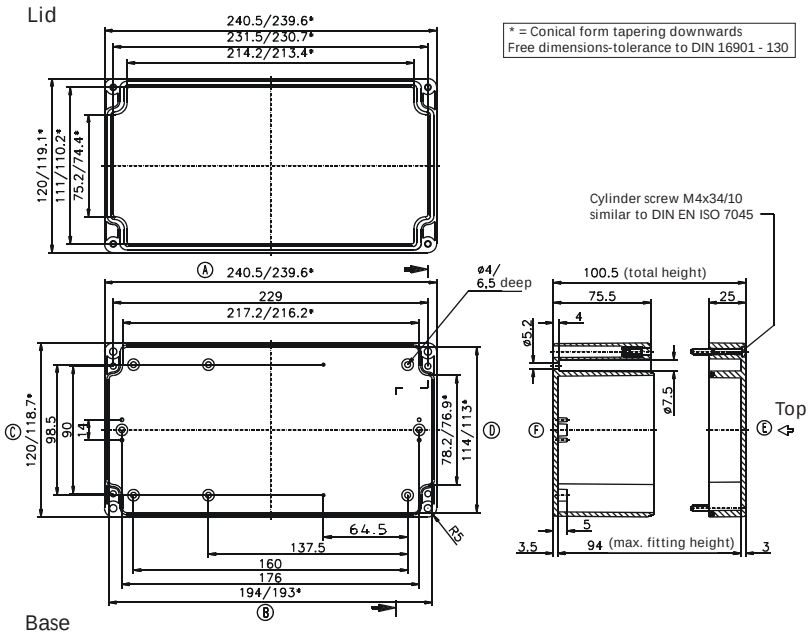

Type: ***. . .15 20 08*** External dimensions: ***150 x 200 x 75 mm*** Weight: ***666 g***

DIN rail length in mm	max. fitting length in mm	Mounting plate (thickness in mm)	External mounting brackets	External hinge* set	EMC version	Self-adhesive rubber feet set	Silicone lid seal	Sealable lid screw in steel	
TS 35									
170	174	2	•	•	•	•	•	•	

Maximum number of cable glands to ***DIN 50262****

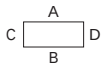

M	Corner dim.	Side A/B	Side C/D	PG	Corner dim.	Side A/B	Side C/D
12	17.25	30	17	7	17.25	30	17
16	25.30	14	8	9	21.85	20	9
20	27.60	12	6	11	25.30	14	8
25	37.95	5	3	13.5	27.60	12	6
32	48.30	3	2	16	31.05	10	4
40	60.95			21	37.95	5	3
50	69.00			29	48.30	3	2
63	74.75			36	60.95		
				42	69.00		
				48	74.75		

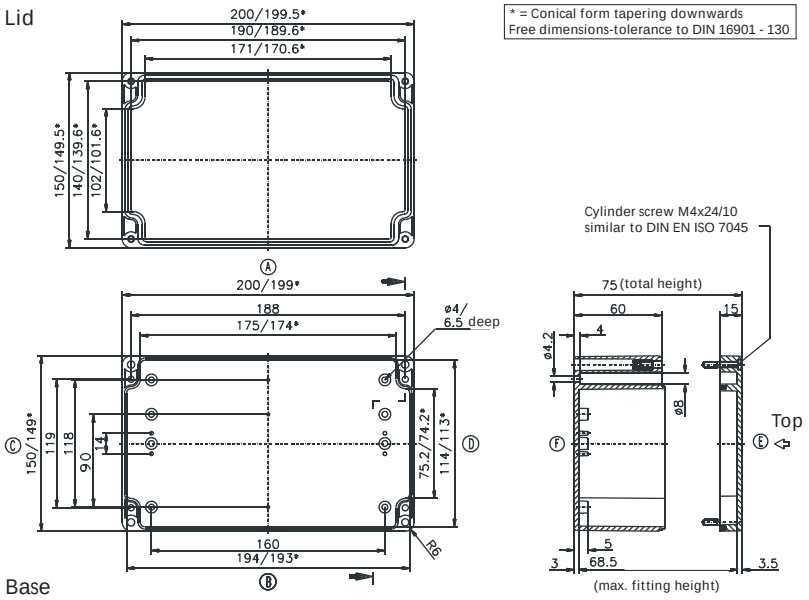

* Please quote mounting side

«ЭйБиЭн»
Тел.\факс +375(17) 390-51-85 info@abn.by Тел. +375(44) 592-00-86
Тел.\факс +375(17) 390-51-86 www.abn.by

Type: ***. . .16 24 09*** External dimensions: ***160 x 240 x 90 mm*** Weight: ***830 g***

DIN rail length in mm	max. fitting length in mm	Mounting plate (thickness in mm)	External mounting brackets	External hinge* set	EMC version	Self-adhesive rubber feet set	Silicone lid seal	Sealable lid screw in steel	
TS 35									
230	214	2.5	•	•	•	•	•	•	

Maximum number of cable glands to ***DIN 50262****

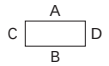

M	Corner dim.	Side A/B	Side C/D	PG	Corner dim.	Side A/B	Side C/D
12	17.25	40	26	7	17.25	40	26
16	25.30	18	11	9	21.85	24	15
20	27.60	12	8	11	25.30	16	11
25	37.95	8	4	13.5	27.60	12	8
32	48.30	4	2	16	31.05	12	8
40	60.95	2	2	21	37.95	6	4
50	69.00	2	1	29	48.30	4	2
63	74.75			36	60.95	2	2
				42	69.00	2	1
				48	74.75		

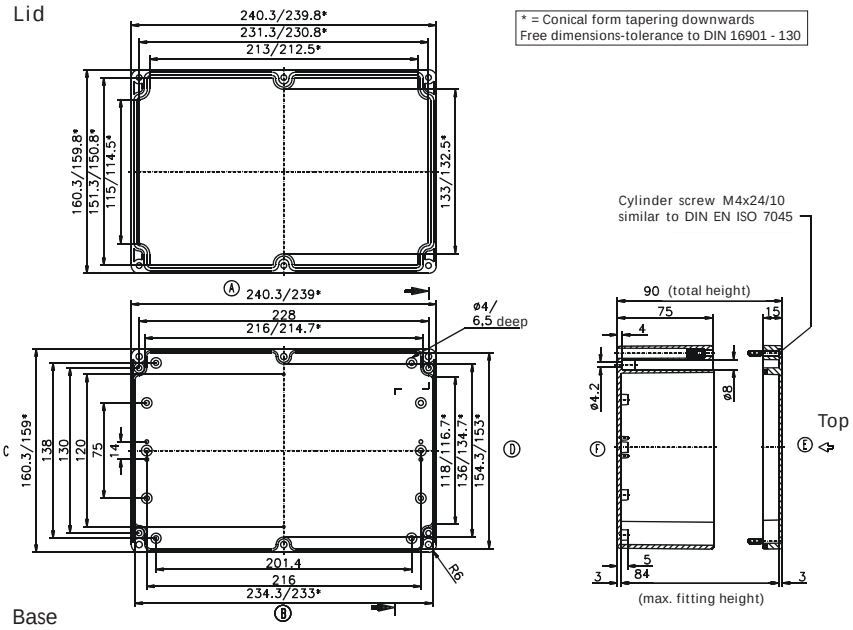

Type: ***. . .16 24 12*** External dimensions: ***160 x 240 x 120 mm*** Weight: ***970 g***

DIN rail length in mm	max. fitting length in mm	Mounting plate (thickness in mm)	External mounting brackets	External hinge* set	EMC version	Self-adhesive rubber feet set	Silicone lid seal	Sealable lid screw in steel	
TS 35									
230	214	2.5	•	•	•	•	•		

Maximum number of cable glands to ***DIN 50262****

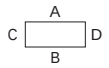

M	Corner dim.	Side A/B	Side C/D	PG	Corner dim.	Side A/B	Side C/D
12	17.25	40	26	7	17.25	40	26
16	25.30	22	12	9	21.85	24	15
20	27.60	16	9	11	25.30	18	12
25	37.95	8	5	13.5	27.60	16	9
32	48.30	4	3	16	31.05	12	8
40	60.95	2	2	21	37.95	8	5
50	69.00	2	1	29	48.30	4	2
63	74.75			36	60.95	2	2
				42	69.00	2	1
				48	74.75		

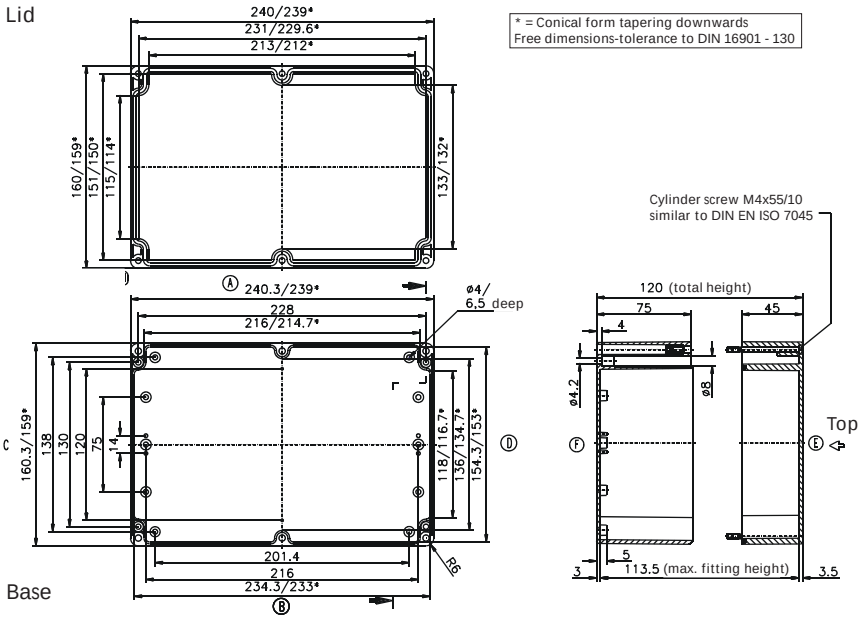

* Please quote mounting side

«ЭйБиЭн»
Тел.\факс +375(17) 390-51-85 info@abn.by Тел. +375(44) 592-00-86
Тел.\факс +375(17) 390-51-86 www.abn.by

Type: ***. . .16 36 10*** External dimensions: ***160 x 360 x 100 mm*** Weight: ***1310 g***

DIN rail length in mm	max. fitting length in mm	Mounting plate (thickness in mm)	External mounting brackets	External hinge* set	EMC version	Self-adhesive rubber feet set	Silicone lid seal	Sealable lid screw in steel	
TS 35									
345	333	2.5	•	•	•	•	•		

Maximum number of cable glands to ***DIN 50262****

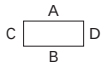

M	Corner dim.	Side A/B	Side C/D	PG	Corner dim.	Side A/B	Side C/D
12	17.25	72	24	7	17.25	72	24
16	25.30	36	12	9	21.85	44	15
20	27.60	28	9	11	25.30	36	11
25	37.95	16	5	13.5	27.60	28	9
32	48.30	8	2	16	31.05	20	6
40	60.95	4	2	21	37.95	16	5
50	69.00	4	1	29	48.30	6	2
63	74.75	4		36	60.95	4	2
				42	69.00	4	1
				48	74.75	4	

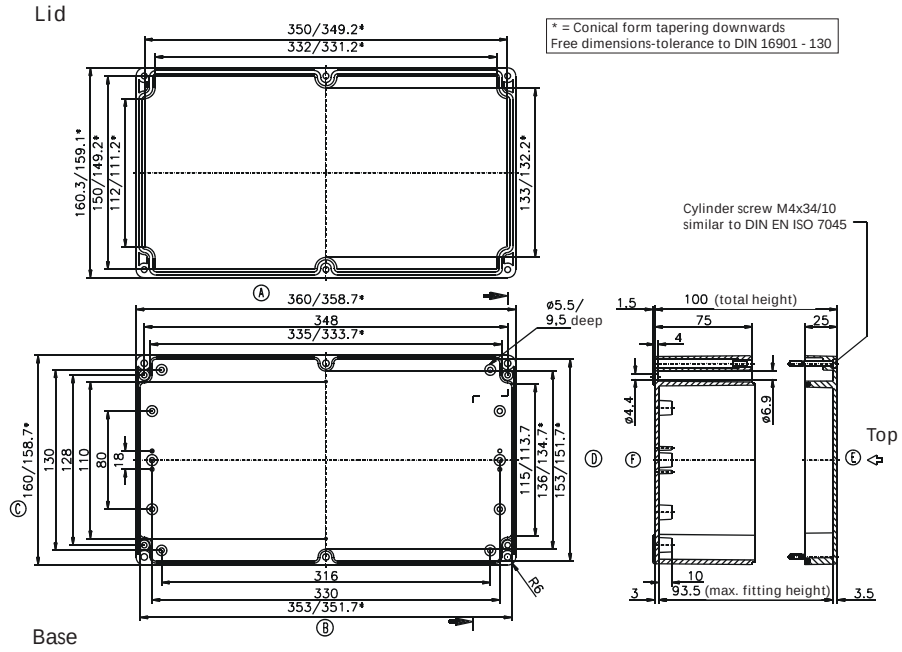

Type: ***. . .20 36 15*** External dimensions: ***200 x 360 x 149 mm*** Weight: ***2166 g***

DIN rail length in mm	max. fitting length in mm	Mounting plate (thickness in mm)	External mounting brackets	External hinge* set	EMC version	Self-adhesive rubber feet set	Silicone lid seal	Sealable lid screw in steel	
TS 35									
345	333	2.5	•	•	•		•		

Maximum number of cable glands to ***DIN 50262****

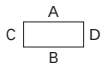

M	Corner dim.	Side A/B	Side C/D	PG	Corner dim.	Side A/B	Side C/D
12	17.25	96	35	7	17.25	96	35
16	25.30	44	18	9	21.85	56	24
20	27.60	32	15	11	25.30	44	16
25	37.95	18	6	13.5	27.60	32	15
32	48.30	12	5	16	31.05	30	12
40	60.95	6	2	21	37.95	16	6
50	69.00	4	2	29	48.30	12	4
63	74.75	4	1	36	60.95	6	2
				42	69.00	4	2
				48	74.75	4	1

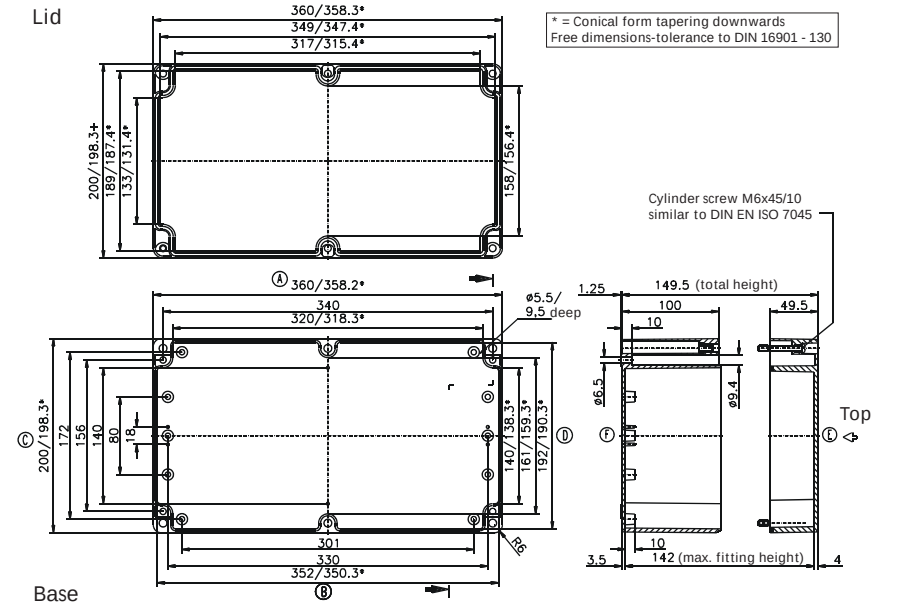

* Please quote mounting side

«ЭйБиЭн»
Тел.\факс +375(17) 390-51-85 info@abn.by Тел. +375(44) 592-00-86
Тел.\факс +375(17) 390-51-86 www.abn.by

Type: ***. . .23 30 09*** External dimensions: ***230 x 300 x 85 mm*** Weight: ***1300 g***

DIN rail length in mm	max. fitting length in mm	Mounting plate (thickness in mm)	External mounting brackets	External hinge* set	EMC version	Self-adhesive rubber feet set	Silicone lid seal	Sealable lid screw in steel	
TS 35									
290	274	2	•	•	•	•	•		

Maximum number of cable glands to ***DIN 50262****

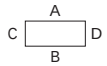

M	Corner dim.	Side A/B	Side C/D	PG	Corner dim.	Side A/B	Side C/D
12	17.25	42	26	7	17.25	42	26
16	25.30	20	14	9	21.85	24	16
20	27.60	16	9	11	25.30	20	12
25	37.95	6	5	13.5	27.60	16	9
32	48.30	4	4	16	31.05	12	7
40	60.95			21	37.95	6	5
50	69.00			29	48.30	4	3
63	74.75			36	60.95		
				42	69.00		
				48	74.75		

Lid

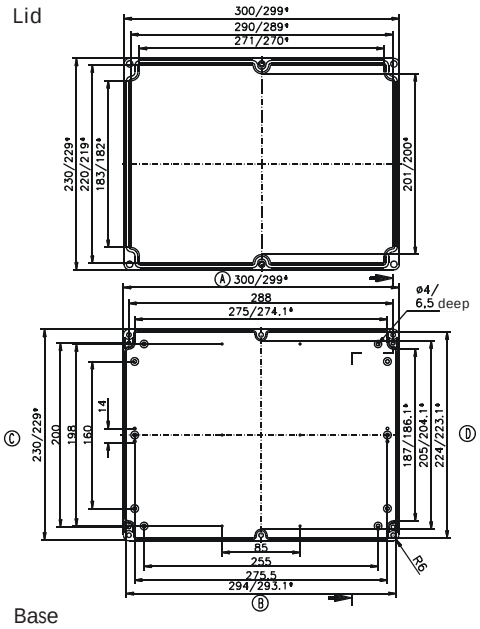

Base

* = Conical form tapering downwards
Free dimensions-tolerance to DIN 16901 - 130

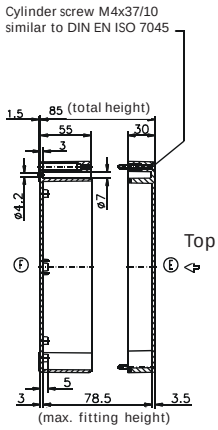

Type: ***. . .23 30 11*** External dimensions: ***230 x 300 x 110 mm*** Weight: ***1575 g***

DIN rail length in mm	max. fitting length in mm	Mounting plate (thickness in mm)	External mounting brackets	External hinge* set	EMC version	Self-adhesive rubber feet set	Silicone lid seal	Sealable lid screw in steel	
TS 35									
290	274	2	•	•	•	•	•		

Maximum number of cable glands to ***DIN 50262****

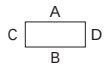

M	Corner dim.	Side A/B	Side C/D	PG	Corner dim.	Side A/B	Side C/D
12	17.25	42	26	7	17.25	42	26
16	25.30	20	14	9	21.85	24	16
20	27.60	16	9	11	25.30	20	12
25	37.95	6	5	13.5	27.60	16	9
32	48.30	4	4	16	31.05	10	7
40	60.95			21	37.95	6	5
50	69.00			29	48.30	4	3
63	74.75			36	60.95		
				42	69.00		
				48	74.75		

Lid

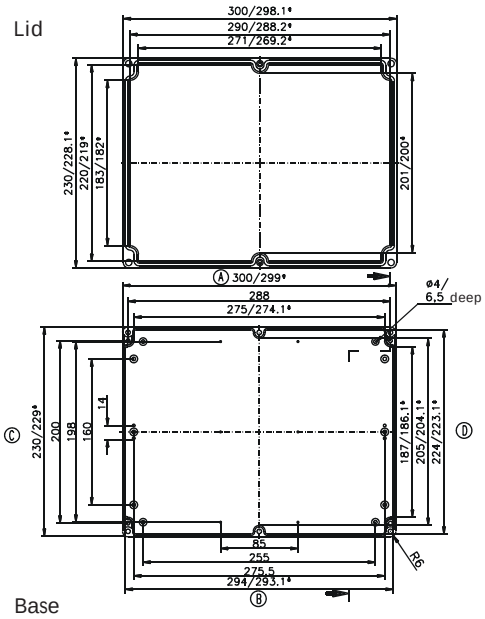

Base

* = Conical form tapering downwards
Free dimensions-tolerance to DIN 16901 - 130

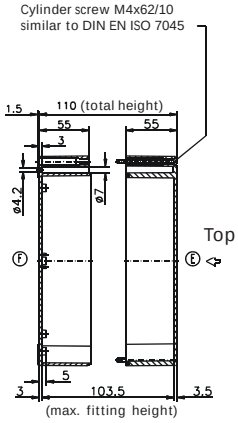

* Please quote mounting side

«ЭйБиЭн»
Тел.\факс +375(17) 390-51-85 info@abn.by Тел. +375(44) 592-00-86
Тел.\факс +375(17) 390-51-86 www.abn.by

Type: **09.40 36 15** External dimensions: **400 x 360 x 150 mm** Weight: **2470 g**

DIN rail length in mm	max. fitting length in mm	Mounting plate (thickness in mm)	External mounting brackets	External hinge* set	EMC version	Self-adhesive rubber feet set	Silicone lid seal	Sealable lid screw in steel	
TS 35									
345	300	2	•	•	•		•		

Maximum number of cable glands to ***DIN 50262****

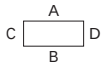

M	Corner dim.	Side A/B	Side C/D	PG	Corner dim.	Side A/B	Side C/D
12	17.25	102	108	7	17.25	96	102
16	25.30	48	48	9	21.85	66	66
20	27.60	40	40	11	25.30	44	48
25	37.95	18	22	13,5	27.60	36	40
32	48.30	12	12	16	31.05	30	30
40	60.95	6	6	21	37.95	18	18
50	69.00	4	4	29	48.30	12	12
63	74.75	4	4	36	60.95	6	6
				42	69.00	4	4
				48	74.75	4	4

Lid

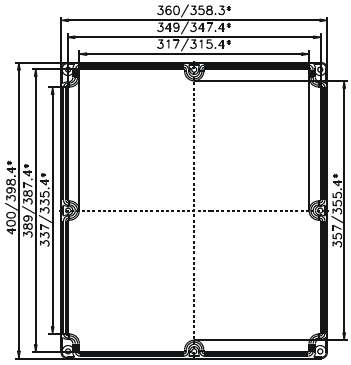

* = Conical form tapering downwards
Free dimensions-tolerance to DIN 16901 - 130

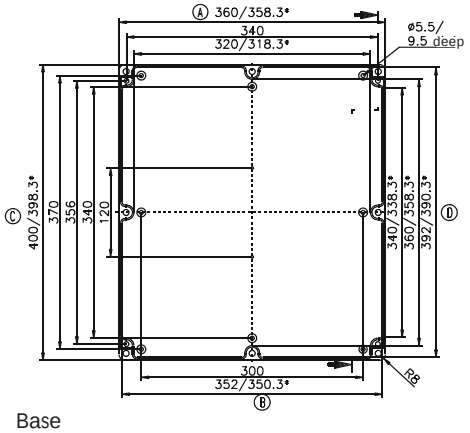

Base

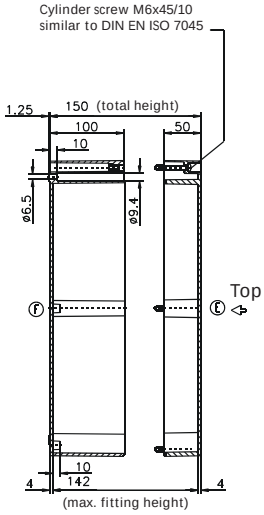

* Please quote mounting side

«ЭйБиЭн»
Тел.\факс +375(17) 390-51-85 info@abn.by Тел. +375(44) 592-00-86
Тел.\факс +375(17) 390-51-86 www.abn.by

- Light plastic enclosure for industrial applications with flange pre-embossing
- Combination options with other polycarbonate flange enclosures
- Snap lock technology and flange quick-fixing-system
- Standard and transparent lid options

Included in delivery

Complete closed enclosure body with flange break-out points, lid with plastic quick release lock; 4 threaded inserts for internal fixing.

Technical data

Material:

Polycarbonate

Colour:

Enclosure: RAL 7032, pebble grey

Lid: transparent

Ingress protection:

IP 65 to EN 60529

Impact resistance:

7 Joule to EN 60079-0

(flange pre-embossing excepted)

Flammability:

enclosure: V0 / self-extinguishing, UL 94

transparent lid: V2 / UL 94

Insulation:

fully insulated to VDE 0100

Disruptive strength:

enclosure: >18 KV/mm, IEC 60243-1

transparent lid: >30 KV/mm, IEC 60243-1

Seal:

CR round seal

Toxicity:

low-halogen

Surface resistance:

enclosure: >10^{15} Ohm, IEC 60093

Temperature range:

enclosure: -40°C to +100°C (incl. seals)

transparent lid: -40°C to +100°C (incl. seals)

«ЭйБиЭн»
Тел.\факс +375(17) 390-51-85 info@abn.by Тел. +375(44) 592-00-86
Тел.\факс +375(17) 390-51-86 www.abn.by

Polycarbonate Flange

Programme range

Type	Dimensions W x L x H	Flange openings	Enclosure with lid 20 mm	Enclosure with transparent lid 20 mm
17.01	170 x 134 x 130	2	***17.01 10 00***	***17.01 10 10****
17.02	170 x 170 x 130	4	***17.02 10 00***	***17.02 10 10****
17.03	170 x 269 x 130	4	***17.03 10 00***	***17.03 10 10****
17.04	269 x 269 x 130	4	***17.04 10 00***	***17.04 10 10****
17.05	269 x 540 x 130	6	***17.05 10 00***	***17.05 10 10****
17.06	269 x 441 x 130	4	***17.06 10 00***	**-**

* transparent lid on request

Accessories (depending on type)

Type	DIN rail TS 32	DIN rail TS 35	Earthing rail	Mounting plate
17.01	***10.06 17 04***	***10.06 17 24***	***10.06 21 00***	***17.01 60 00***
17.02	***10.06 17 04***	***10.06 17 24***	***10.06 21 00***	***17.02 60 00***
17.03	***10.06 17 01***	***10.06 17 22***	***10.06 21 01***	***17.03 60 00***
17.04	***10.06 17 02***	***10.06 17 22***	***10.06 21 01***	***17.04 60 00***
17.05	***10.06 17 03***	***10.06 17 23***	***10.06 21 02***	***17.05 60 00***
17.06		***10.06 17 25***	***10.06 20 11***	***17.06 60 00***

Accessories (for all types)

Blind flange I	***17.00 31 00***
Blind flange II	***17.00 32 00***
PG flange II, 19 x PG9/PG13,5	***17.00 34 00***
PG flange II, 16 x PG11/PG16	***17.00 35 00***
PG flange II, 10 x PG9/PG13,5; 4 x PG11/PG16; 2 x PG21/PG29	***17.00 33 00***
Connection flange I	***17.00 36 00***
Connection flange II	***17.00 37 00***
Mounting brackets (set of 4 pcs.), 2 sets required for type 17.05	***17.00 42 00***
Additional threaded inserts (set of 10 pcs.)	***10.03 50 03***
External mounting brackets (set of 4 pcs.)	***10.03 11 04***
Replacement fastening wedges (set of 10 pcs.)	***17.00 41 00***
Internal hinges (set of 2 pcs.)	***17.00 55 00***

Terminal mounting

	Series terminals															Earth conductor connections													
	Phoenix								***Weidmüller***							***Phoenix***								***Weidmüller***					
DIN rail TS 35	X	X	X	X	X	X	X	X	X	X	X	X	X	X	X														
Voltage (V)	500	800	800	800	1000	1000	1000	1000	500	800	800	800	800	1000	1000														
Current (A)	17	24	32	41	57	76	101	150	24	24	32	41	57	76	125														
Nom. cross section (mm²)	1.5	2.5	2.5	4	6	10	16	35	2.5	2.5	4	6	10	16	35														
Terminal (mm)	4.2	5.2	5.2	6.2	8.2	10.2	12.2	15.2	5	5	6	8	10	12	16														
Terminal type / Order No.	UK 1,5 N	UK 2,5 N	UK 3 N	UK 4 N	UK 6 N	UK 10 N	UK 16 N	UK 35	WDU 2,5 N	WDU 2,5	WDU 4	WDU 6	WDU 10	WDU 16	WDU 35	USLGK 1,5 N insulated yellow/green	USLGK 2,5 N insulated yellow/green	USLGK 3 N insulated yellow/green	USLGK 4 N insulated yellow/green	USLGK 5 N insulated yellow/green	USLGK 10 N insulated yellow/green	USLGK 16 N insulated yellow/green	USLGK 35 insulated yellow/green	WPE 2,5 green/yellow	WPE 4 green/yellow	WPE 6 green/yellow	WPE 10 green/yellow	WPE 16 green/yellow	WPE 35 green/yellow
17.01 10 00	28	22	22	19	14	11	9	7	22	22	19	14	11	9	7														
17.02 10 00	28	22	22	19	14	11	9	7	22	22	19	14	11	9	7														
17.03 10 00	45	37	37	31	23	18	15	12	37	37	31	23	18	15	11														
17.04 10 00	45*	37*	37*	31*	23*	18*	15*	12*	37*	37*	31*	23*	18*	15*	11*						as required								
17.05 10 00	110*	89*	89*	74*	56*	45*	37*	30*	91*	91*	76*	57*	45*	38*	28*														
1706 10 00	86*	69*	69*	58*	44*	35*	29*	23*	71*	71*	59*	44*	35*	29*	22*														

* 2 DIN rails possible

«ЭйБиЭн»
Тел.\факс +375(17) 390-51-85 info@abn.by Тел. +375(44) 592-00-86
Тел.\факс +375(17) 390-51-86 www.abn.by

Accessories

Blind flange

Order No.	version
17.00 31 00	Blind flange I (125 x 106 mm)
17.00 32 00	Blind flange II (224 x 106 mm)

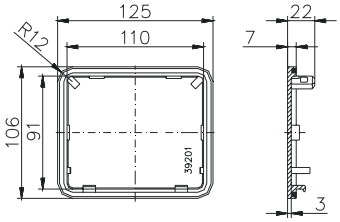

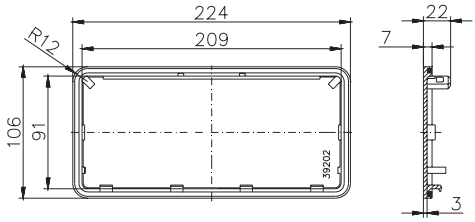

Threaded flange
with pre-embossed holes

Order No.	version
17.00 34 00	19 x PG 9 / PG 13,5
17.00 35 00	16 x PG 11 / PG 16
17.00 33 00	10 x PG 9 / PG 13,5; 4 x PG 11 / PG 16; 2 x PG 21 / PG 29

Connection flange
to connect two polycarbonate flange enclosures with itself

Order No.	version
17.00 36 00	Connection flange I
17.00 37 00	Connection flange II

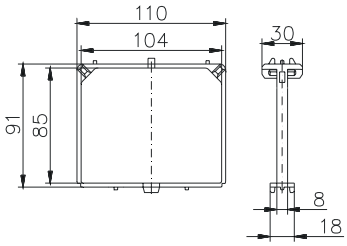

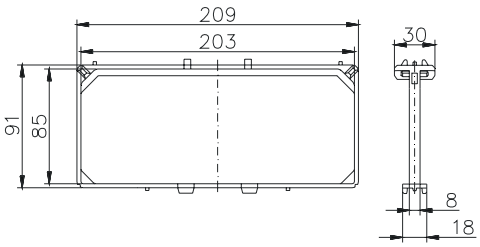

«ЭйБиЭн»
Тел.\факс +375(17) 390-51-85 info@abn.by Тел. +375(44) 592-00-86
Тел.\факс +375(17) 390-51-86 www.abn.by

Accessories

External mounting brackets
set = 4 pcs.

Order No. ***10.03 11 04***

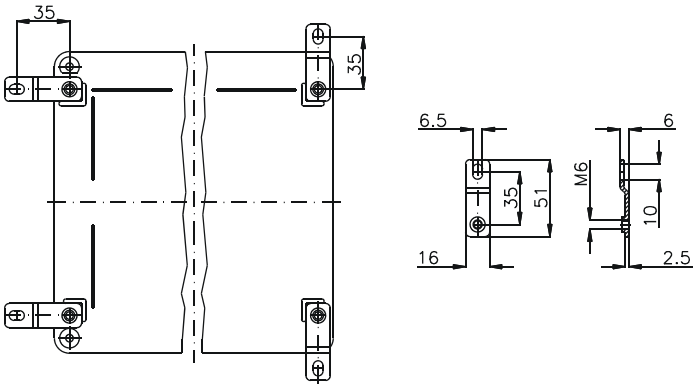

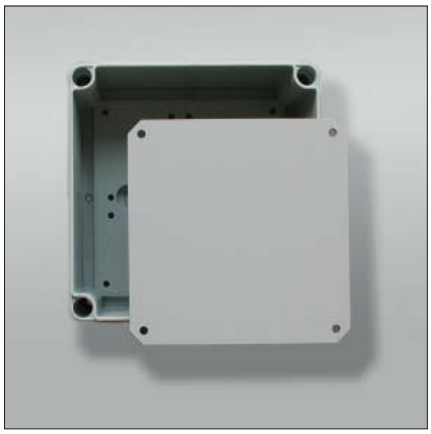

Mounting plates
for fitting electro-mechanical components

Mounting bracket
set = 4 pcs.

Order No. ***17.00 42 00***

«ЭйБиЭн»
Тел.\факс +375(17) 390-51-85 info@abn.by Тел. +375(44) 592-00-86
Тел.\факс +375(17) 390-51-86 www.abn.by

Type: ***17.01 10 . .*** External dimensions: ***170 x 134 x 130 mm*** Weight: ***793 g***

DIN rail length in mm	max. fitting length in mm	Mounting plate (thickness in mm)	External mounting brackets	Hinged lid	No. of flanges			
TS 35								
140	115	3	•	•	2			

Maximum number of cable glands to ***50262****

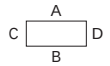

M	Corner dim.	Side A/B	Side C/D	*PG*	Corner dim.	Side A/B	Side C/D
12	17,25	16	27	7	17,25	16	27
16	25,30	8	12	9	21,85	12	16
20	27,60	6	10	11	25,30	8	12
25	37,95	3	5	13,5	27,60	6	10
32	48,30	2	4	16	31,05	4	9
40	60,95	1	2	21	37,95	3	5
50	69,00	1	1	29	48,30	2	4
63	74,75	0	1	36	60,95	1	1
				42	69,00	1	1
				48	74,75	0	1

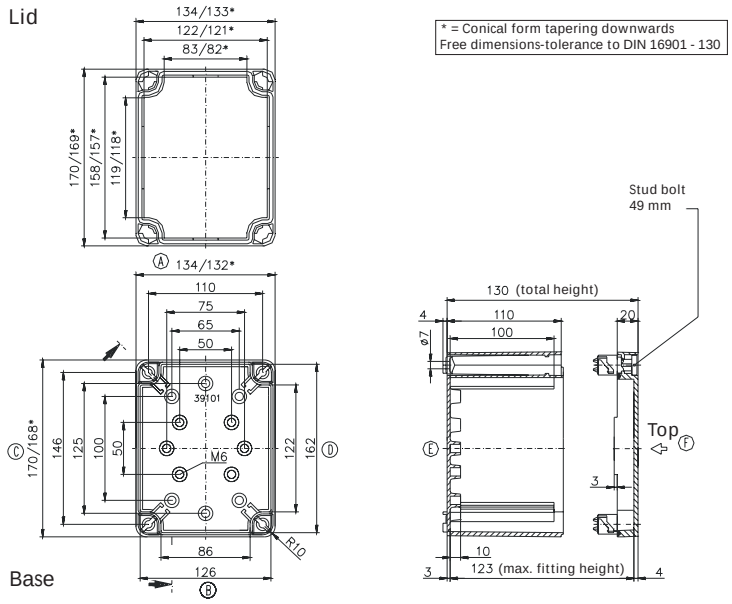

Type: ***17.02 10 . .*** External dimensions: ***170 x 170 x 130 mm*** Weight: ***904 g***

DIN rail length in mm	max. fitting length in mm	Mounting plate (thickness in mm)	External mounting brackets	Hinged lid	No. of flanges			
TS 35								
140	115	3	•	•	4			

Maximum number of cable glands to ***50262****

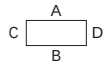

M	Corner dim.	Side A/B	Side C/D	*PG*	Corner dim.	Side A/B	Side C/D
12	17,25	27	27	7	17,25	27	27
16	25,30	12	12	9	21,85	16	16
20	27,60	10	10	11	25,30	12	12
25	37,95	5	5	13,5	27,60	10	10
32	48,30	4	4	16	31,05	9	9
40	60,95	2	2	21	37,95	5	5
50	69,00	1	1	29	48,30	4	4
63	74,75	1	1	36	60,95	1	1
				42	69,00	1	1
				48	74,75	1	1

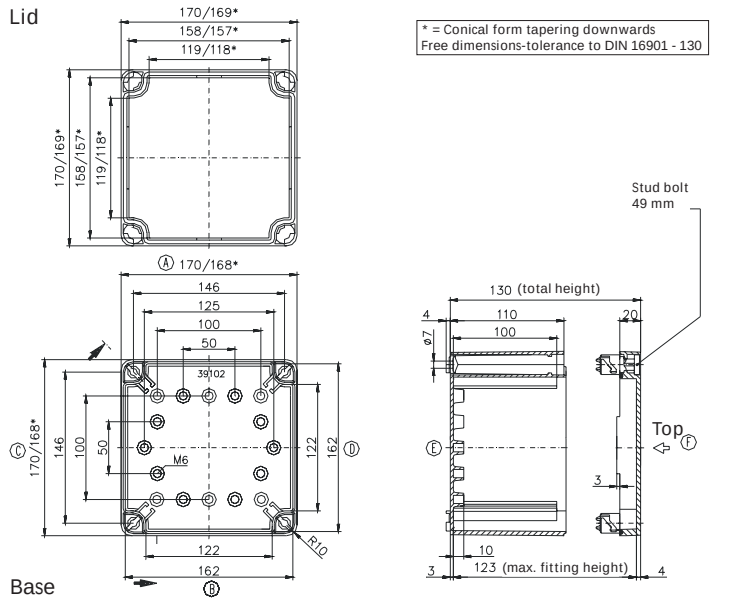

«ЭйБиЭн»
Тел.\факс +375(17) 390-51-85 info@abn.by Тел. +375(44) 592-00-86
Тел.\факс +375(17) 390-51-86 www.abn.by

Type: **17.03 10 . .** External dimensions: ***170 x 269 x 130 mm*** Weight: ***1209 g***

DIN rail length in mm	max. fitting length in mm	Mounting plate (thickness in mm)	External mounting brackets	Hinged lid	No. of flanges			
TS 35								
215	190	3	•	•	4			

Maximum number of cable glands to ***50262****

A C D B

M	Corner dim.	Side A/B	Side C*/D*	PG	Corner dim.	Side A/B	Side C*/D*
12	17,25	60	27	7	17,25	60	27
16	25,30	28	12	9	21,85	35	16
20	27,60	21	10	11	25,30	28	12
25	37,95	12	5	13,5	27,60	21	10
32	48,30	8	4	16	31,05	18	9
40	60,95	4	2	21	37,95	11	5
50	69,00	3	1	29	48,30	8	4
63	74,75	2	1	36	60,95	3	1
				42	69,00	3	1
				48	74,75	2	1

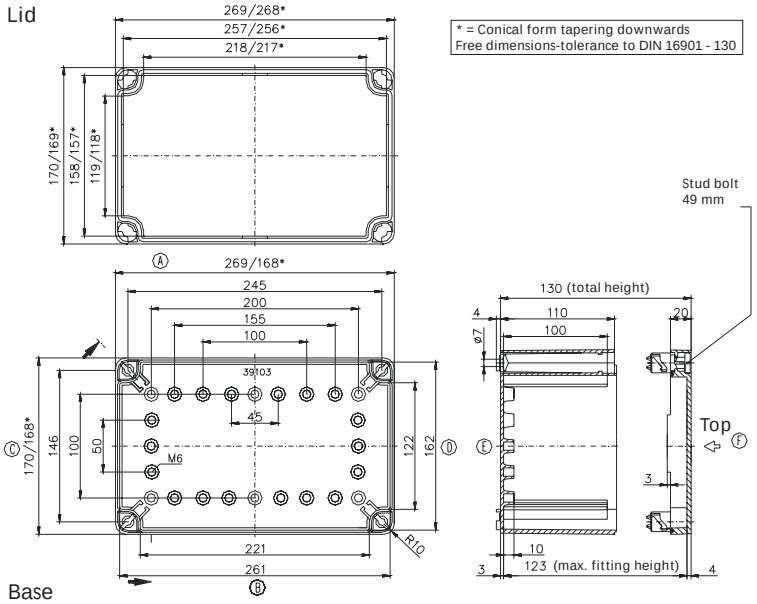

Type: **17.04 10 . .** External dimensions: ***269 x 269 x 130 mm*** Weight: ***1707 g***

DIN rail length in mm	max. fitting length in mm	Mounting plate (thickness in mm)	External mounting brackets	Hinged lid	No. of flanges			
TS 35								
215	190	3	•	•	4			

Maximum number of cable glands to ***50262****

A C D B

M	Corner dim.	Side A/B	Side C/D	PG	Corner dim.	Side A/B	Side C/D
12	17,25	60	60	7	17,25	60	60
16	25,30	28	28	9	21,85	35	35
20	27,60	21	21	11	25,30	28	28
25	37,95	12	12	13,5	27,60	21	21
32	48,30	8	8	16	31,05	18	18
40	60,95	4	4	21	37,95	11	11
50	69,00	3	3	29	48,30	8	8
63	74,75	2	2	36	60,95	3	3
				42	69,00	3	3
				48	74,75	2	2

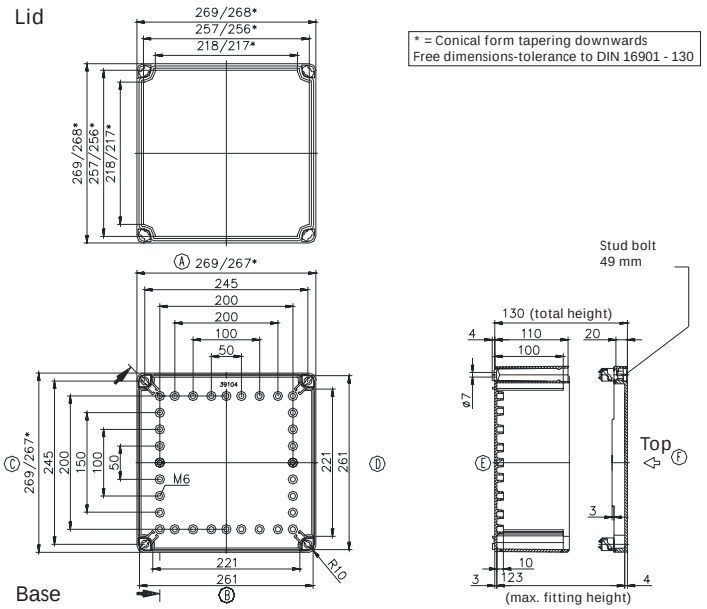

«ЭйБиЭн»
Тел.\факс +375(17) 390-51-85 info@abn.by Тел. +375(44) 592-00-86
Тел.\факс +375(17) 390-51-86 www.abn.by

Type: ***17.05 10 . .*** External dimensions: ***269 x 540 x 130 mm*** Weight: ***3150 g***

DIN rail length in mm	max. fitting length in mm	Mounting plate (thickness in mm)	External mounting brackets	Hinged lid	No. of flanges			
TS 35								
485	450	3	•	•	6			

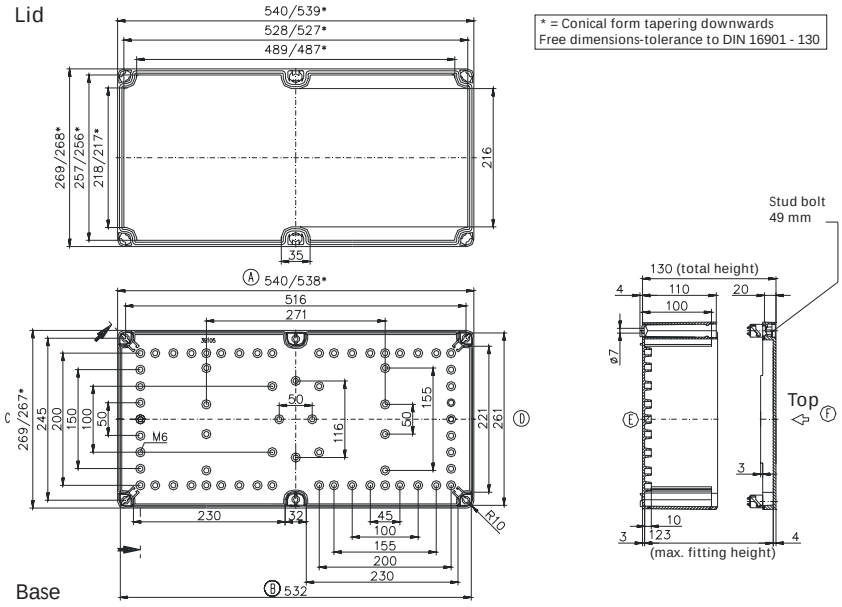

* = Conical form tapering downwards
Free dimensions-tolerance to DIN 16901 - 130

Maximum number of cable glands to ***50262****

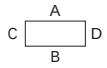

M	Corner dim.	Side A/B	Side C/D	***PG***	Corner dim.	Side A/B	Side C/D
12	17,25	120	60	7	17,25	120	60
16	25,30	54	28	9	21,85	70	35
20	27,60	42	21	11	25,30	56	28
25	37,95	24	12	13,5	27,60	42	21
32	48,30	16	8	16	31,05	36	18
40	60,95	8	4	21	37,95	22	11
50	69,00	6	3	29	48,30	16	8
63	74,75	4	2	36	60,95	6	3
				42	69,00	6	3
				48	74,75	4	2

Type: ***17.06 10 . .*** External dimensions: ***269 x 441 x 130 mm*** Weight: ***2000 g***

DIN rail length in mm	max. fitting length in mm	Mounting plate (thickness in mm)	External mounting brackets	Hinged lid	No. of flanges			
TS 35								
385	350	3	•	•	4			

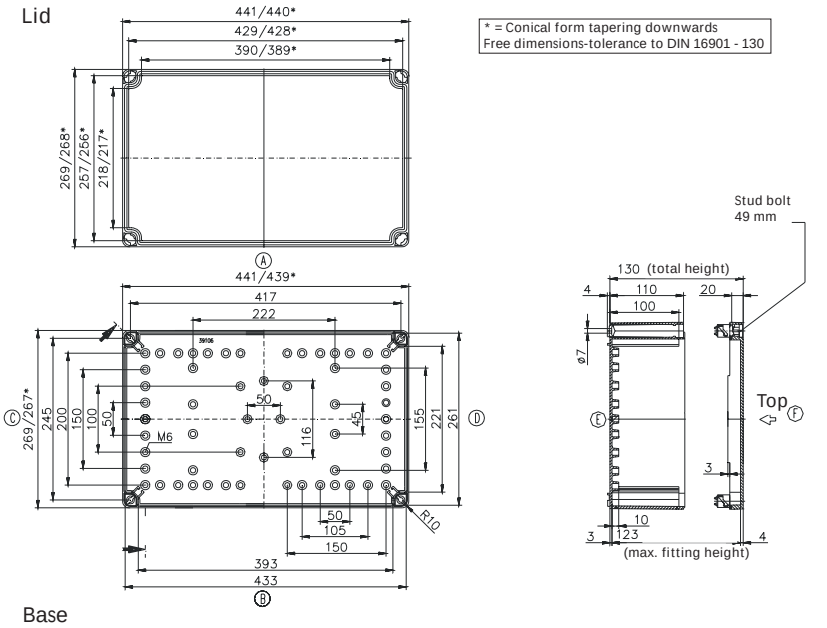

* = Conical form tapering downwards
Free dimensions-tolerance to DIN 16901 - 130

Maximum number of cable glands to ***50262****

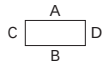

M	Corner dim.	Side A/B	Side C/D	***PG***	Corner dim.	Side A/B	Side C/D
12	17,25	60	60	7	17,25	60	60
16	25,30	28	28	9	21,85	35	35
20	27,60	21	21	11	25,30	28	28
25	37,95	12	12	13,5	27,60	21	21
32	48,30	8	8	16	31,05	18	18
40	60,95	4	4	21	37,95	11	11
50	69,00	3	3	29	48,30	8	8
63	74,75	2	2	36	60,95	3	3
				42	69,00	3	3
				48	74,75	2	2

«ЭйБиЭн»
Тел.\факс +375(17) 390-51-85 info@abn.by Тел. +375(44) 592-00-86
Тел.\факс +375(17) 390-51-86 www.abn.by

Applications

«ЭйБиЭн»
Тел.\факс +375(17) 390-51-85 info@abn.by Тел. +375(44) 592-00-86
Тел.\факс +375(17) 390-51-86 www.abn.by

- Thermoplastic enclosure for industrial applications
- ECO version: base with smooth side walls, lid version standard or transparent
- PCI version: base with knock-outs for cable glands

Included in delivery

Enclosure consisting of lid, seal incl. captive +/- lid screws, set of screws for fastening, incl. sealing caps.

Technical data

Material:
PS thermoplastic

Colour:
RAL 7035, light grey
special colour on request

Ingress protection:
IP 66 to EN 60529

Impact resistance:
2 Joule to EN 60068-2-75

Flammability:
UL 94 HB

Insulation:
protection class II to VDE 0140

Toxicity:
low halogen

Weather resistance:
generally good, do not expose to direct sun light

Chemical resistance:
generally good, but not resistant to benzine, diesel, oils and fats as well as strong acids

Temperature range:
-25°C to +40°C

«ЭйБиЭн»
Тел.\факс +375(17) 390-51-85 info@abn.by Тел. +375(44) 592-00-86
Тел.\факс +375(17) 390-51-86 www.abn.by

Programme range

Type	Order No.	Dimensions	Type	Order No.	Mounting plate	DIN rail TS 15					DIN rail TS 35				
						49.5 mm	80 mm	92 mm	111 mm	154 mm	81 mm	106 mm	144 mm	216 mm	336 mm
ECO 01-6	***60.07 07 11***	65 x 65 x 57	PCI 01-6M	***60.07 07 15***	•	•									
ECO 01-8	***60.07 07 21***	65 x 65 x 81			•	•									
ECO 02-6	***60.07 09 11***	65 x 94 x 57	PCI 02-6M	***60.07 09 15***	•	•	•								
ECO 02-8	***60.07 09 21***	65 x 94 x 81			•	•	•								
ECO 03-6	***60.09 09 11***	94 x 94 x 57	PCI 03-6M	***60.09 09 15***	•		•								
ECO 03-8	***60.09 09 21***	94 x 94 x 81			•		•								
ECO 03-6 t	***60.09 09 12***	94 x 94 x 57			•		•								
ECO 03-8 t	***60.09 09 22***	94 x 94 x 81			•		•								
ECO 04-6	***60.09 13 11***	94 x 130 x 57	PCI 04-6M	***60.09 13 15***	•		•	•	•		•	•			
ECO 04-8	***60.09 13 21***	94 x 130 x 81			•		•	•	•		•	•			
ECO 04-6 t	***60.09 13 12***	94 x 130 x 57			•		•	•	•		•	•			
ECO 04-8 t	***60.09 13 22***	94 x 130 x 81			•		•	•	•		•	•			
ECO 05-7	***60.11 11 11***	110 x 110 x 66			•		•	•			•				
ECO 05-9	***60.11 11 21***	110 x 110 x 90	PCI 05-9M	***60.11 11 15***	•		•	•			•				
ECO 05-7 t	***60.11 11 12***	110 x 110 x 66			•		•	•			•				
ECO 05-9 t	***60.11 11 22***	110 x 110 x 90			•		•	•			•				
ECO 06-7	***60.13 13 11***	130 x 130 x 75	PCI 06-7M	***60.13 13 15***	•		•	•	•		•	•			
ECO 06-10	***60.13 13 21***	130 x 130 x 99			•		•	•	•		•	•			
ECO 06-7 t	***60.13 13 12***	130 x 130 x 75			•		•	•	•		•	•			
ECO 06-10 t	***60.13 13 22***	130 x 130 x 99			•		•	•	•		•	•			
ECO 07-6	***60.09 18 11***	94 x 180 x 57	PCI 07-6M	***60.09 18 15***	•		•			•	•		•		
ECO 07-8	***60.09 18 21***	94 x 180 x 81			•		•			•	•		•		
ECO 07-6 t	***60.09 18 12***	94 x 180 x 57			•		•			•	•		•		
ECO 07-8 t	***60.09 18 22***	94 x 180 x 81			•		•			•	•		•		
ECO 08-9	***60.11 18 11***	110 x 180 x 90	PCI 08-9M	***60.11 18 15***	•		•	•		•	•		•		
ECO 08-11	***60.11 18 21***	110 x 180 x 111	PCI 08-11M	***60.11 18 25***	•		•	•		•	•		•		
ECO 08-9 t	***60.11 18 12***	110 x 180 x 90			•		•	•		•	•		•		
ECO 08-11 t	***60.11 18 22***	110 x 180 x 111			•		•	•		•	•		•		
ECO 09-9	***60.18 18 11***	180 x 182 x 90	PCI 09-9M	***60.18 18 15***	•					•			•		
ECO 09-11	***60.18 18 21***	180 x 182 x 111	PCI 09-11M	***60.18 18 25***	•					•			•		
ECO 09-16	***60.18 18 31***	180 x 182 x 165			•					•			•		
ECO 09-9 t	***60.18 18 12***	180 x 182 x 90			•					•			•		
ECO 09-11 t	***60.18 18 22***	180 x 182 x 111			•					•			•		
ECO 09-16 t	***60.18 18 32***	180 x 182 x 165			•					•			•		
ECO 10-6	***60.18 25 10***	180 x 254 x 63	PCI 10-6M	***60.18 25 05***						•			•	•	
ECO 10-9	***60.18 25 11***	180 x 254 x 90	PCI 10-9M	***60.18 25 15***	•					•			•	•	
ECO 10-11	***60.18 25 21***	180 x 254 x 111	PCI 10-11M	***60.18 25 25***	•					•				•	
ECO 10-16	***60.18 25 31***	180 x 254 x 165			•					•				•	
ECO 10-6t	***60.18 25 09***	180 x 254 x 63			•					•			•	•	
ECO 10-9 t	***60.18 25 12***	180 x 254 x 90			•					•				•	
ECO 10-11 t	***60.18 25 22***	180 x 254 x 111			•					•				•	
ECO 10-16 t	***60.18 25 32***	180 x 254 x 165			•					•			•	•	
ECO 11-11	***60.25 36 11***	254 x 361 x 111	PCI 11-11M	***60.25 36 15***	•									•	•
ECO 11-16	***60.25 36 21***	254 x 361 x 165			•									•	•
ECO 11-11 t	***60.25 36 12***	254 x 361 x 111			•									•	•
ECO 11-16 t	***60.25 36 22***	254 x 361 x 165			•									•	•

t = Transparent lid

«ЭйБиЭн»
Тел.\факс +375(17) 390-51-85 info@abn.by Тел. +375(44) 592-00-86
Тел.\факс +375(17) 390-51-86 www.abn.by

Accessories

External mounting brackets	***60.00 04 00***
External hinge (set) to ECO/PCI 07- (small)	***60.00 04 07***
External hinge (set) from ECO/PCI 08- (large)	***60.00 04 08***
Knurled screw (set)	***60.00 04 01***
Spacers (set = 8 pcs.)	***60.00 04 02***

Accessories

Mounting plate
made of plastic, 2.5 mm thick, incl. self-tapping fastening screws and spacers

Order No.	
60.00 01 01	for ECO/PCI 01-
60.00 01 02	for ECO/PCI 02-
60.00 01 03	for ECO/PCI 03-
60.00 01 04	for ECO/PCI 04-
60.00 01 05	for ECO/PCI 05-
60.00 01 06	for ECO/PCI 06-
60.00 01 07	for ECO/PCI 07-
60.00 01 08	for ECO/PCI 08-
60.00 01 09	for ECO/PCI 09-
60.00 01 10	for ECO/PCI 10-
60.00 01 11	for ECO/PCI 11-

Mounting rails

Order No.	
TS 15	
60.00 02 01	49.5 mm for ECO/PCI 01/02-
60.00 02 02	80 mm for ECO/PCI 02/03-
60.00 02 03	92 mm for ECO/PCI 04/05-
60.00 02 04	111 mm for ECO/PCI 04/06-
60.00 02 05	154 mm for ECO/PCI 07-
TS 35/7,5	
60.00 03 01	81 mm for ECO/PCI 05-
60.00 03 02	106 mm for ECO/PCI 04/06-
60.00 03 03	144 mm for ECO/PCI 07/08/09-
60.00 03 04	216 mm for ECO/PCI 10-
60.00 03 05	336 mm for ECO/PCI 11-

Set of hinges
set = 2 pcs.

Order No.	
60.00 04 07	to ECO/PCI 07- (small)
60.00 04 08	from ECO/PCI 08- (large)

«ЭйБиЭн»
Тел.\факс +375(17) 390-51-85 info@abn.by Тел. +375(44) 592-00-86
Тел.\факс +375(17) 390-51-86 www.abn.by

Accessories

External fasteners
set = 4 pcs.

Order No. ***60.00 04 00***

Knurled screws
to clip on the lid screw as a hand turn lock
set = 4 pcs.

Order No. ***60.00 04 01***

Spacers
6 and 8 mm, plastic, for desired spacings between PCB's or mounting plates
set = 8 pcs.

Order No. ***60.00 04 02***

Double membrane cable glands
IP 66, with 2 integrated sealing membranes, interference fit without counter-nut, for wall thicknesses of 1.5 - 4.5 mm

Order No.		Sealing range (mm)
60.00 05 16	50 pcs. M 16	5 - 9
60.00 05 20	50 pcs. M 20	7 - 12
60.00 05 25	50 pcs. M 25	9 - 16
60.00 05 32	50 pcs. M 32	14- 21

Vent plugs
with labyrinth seal to prevent the formation of condensation; IP x 4; for wall thicknesses of 1.5 - 4.5 mm

Order No.	
60.00 04 20	100 pcs. M 20

«ЭйБиЭн»
Тел.\факс +375(17) 390-51-85 info@abn.by Тел. +375(44) 592-00-86
Тел.\факс +375(17) 390-51-86 www.abn.by

Type: ***60.07 07 . .***

Type	Order No.	Dimensions	Weight	DIN rail length in mm	max. fitting length in mm	Mounting plate (thickness in mm)	External mounting brackets	External hinge* set	Knurled screw set	Spacers set = 8 pcs.
ECO 01-6	***60.07 07 11***	65 x 65 x 57	127 g							
PCI 01-6M	***60.07 07 15***	65 x 65 x 57	82 g							
ECO 01-8	***60.07 07 21***	65 x 65 x 81	117 g							
				TS 15						
				49.5	39.5	2.5	•	•	•	•

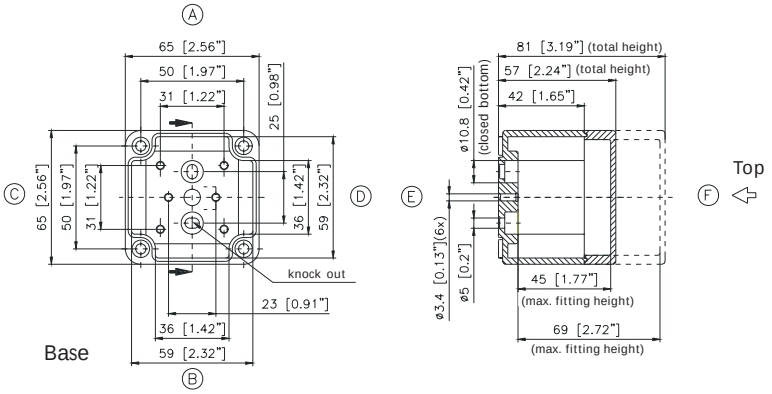

Maximum number of cable glands to ***50262****

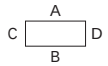

M	Corner dim.	Side A/B	Side C/D	***PG***	Corner dim.	Side A/B	Side C/D
ECO							
12	17.25	2	2	7	17.25	1	1
16	25.30	1	1	9	21.85	1	1
20	27.60	1	1	11	25.30	1	1
25	37.95			13.5	27.60	1	1
32	48.30			16	31.05	1	1
40	60.95			21	37.95		
50	69.00			29	48.30		
63	74.75			36	60.95		

PCI

Pre-embossing for enclosure version		Enclosure side			
PG	M	A	B	C	D
11/16		1	1	1	1
	16/20	1	1	1	1

Type: ***60.07 09 . .***

Type	Order No.	Dimensions	Weight	DIN rail length in mm	max. fitting length in mm	Mounting plate (thickness in mm)	External mounting brackets	External hinge* set	Knurled screw set	Spacers set = 8 pcs.
ECO 02-6	***60.07 09 11***	65 x 94 x 57	118 g							
PCI 02-6M	***60.07 09 15***	65 x 94 x 57	101 g							
ECO 02-8	***60.07 09 21***	65 x 94 x 81	144 g							
				TS 15						
				80	70	2.5	•	•	•	•

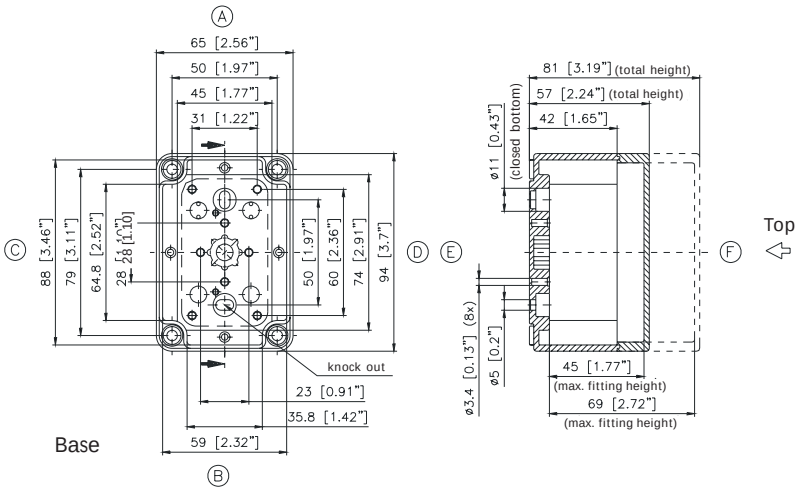

Maximum number of cable glands to ***50262****

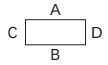

M	Corner dim.	Side A/B	Side C/D	***PG***	Corner dim.	Side A/B	Side C/D
ECO							
12	17.25	2	3	7	17.25	1	3
16	25.30	1	2	9	21.85	1	2
20	27.60	1	2	11	25.30	1	2
25	37.95			13.5	27.60	1	2
32	48.30			16	31.05	1	2
40	60.95			21	37.95		
50	69.00			29	48.30		
63	74.75			36	60.95		

PCI

Pre-embossing for enclosure version		Enclosure side			
PG	M	A	B	C	D
11/16		1	1	2	2
	16/20	1	1	2	2

* Please quote mounting side

«ЭйБиЭн»
Тел.\факс +375(17) 390-51-85 info@abn.by Тел. +375(44) 592-00-86
Тел.\факс +375(17) 390-51-86 www.abn.by

Type: ***60.09 09 . .***

Type	Order No.	Dimensions	Weight	DIN rail length in mm	max. fitting length in mm	Mounting plate (thickness in mm)	External mounting brackets	External hinge* set	Knurled screw set	Spacers set = 8 pcs.
ECO 03-6	***60.09 09 11***	94 x 94 x 57	133 g							
PCI 03-6M	***60.09 09 15***	94 x 94 x 57	300 g							
ECO 03-8	***60.09 09 21***	94 x 94 x 81	300 g							
ECO 03-6t	***60.09 09 12***	94 x 94 x 57	300 g							
ECO 03-8t	***60.09 09 22***	94 x 94 x 81	192 g							
				TS 15						
				80	70	2.5	•	•	•	•

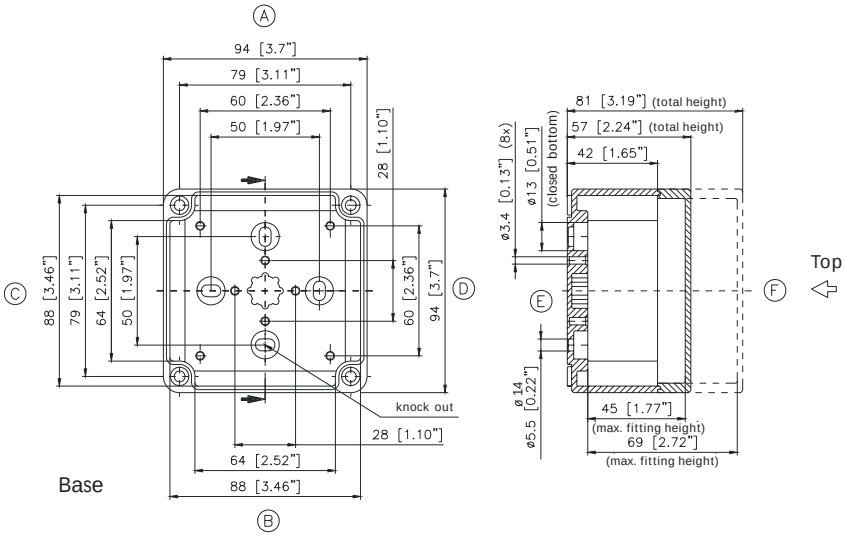

Maximum number of cable glands to ***50262****

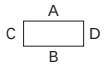

M	Corner dim.	Side A/B	Side C/D	***PG***	Corner dim.	Side A/B	Side C/D
ECO							
12	17.25	3	3	7	17.25	3	3
16	25.30	2	2	9	21.85	2	2
20	27.60	2	2	11	25.30	2	2
25	37.95			13.5	27.60	2	2
32	48.30			16	31.05	2	2
40	60.95			21	37.95		
50	69.00			29	48.30		
63	74.75			36	60.95		

PCI

Pre-embossing for enclosure version		Enclosure side			
PG	M	A	B	C	D
11/16		2	1	2	2
	16/20	2	1	2	2

Type: ***60.09 13 . .***

Type	Order No.	Dimensions	Weight	DIN rail length in mm	max. fitting length in mm	Mounting plate (thickness in mm)	External mounting brackets	External hinge* set	Knurled screw set	Spacers set = 8 pcs.
ECO 04-6	***60.09 13 11***	94 x 130 x 57	210 g							
PCI 04-6M	***60.09 13 15***	94 x 130 x 57	153 g							
ECO 04-8	***60.09 13 21***	94 x 130 x 81	400 g							
ECO 04-6t	***60.09 13 12***	94 x 130 x 57	220 g							
ECO 04-8t	***60.09 13 22***	94 x 130 x 81	360 g							
				TS 15/35						
				106	96	2.5	•	•	•	•

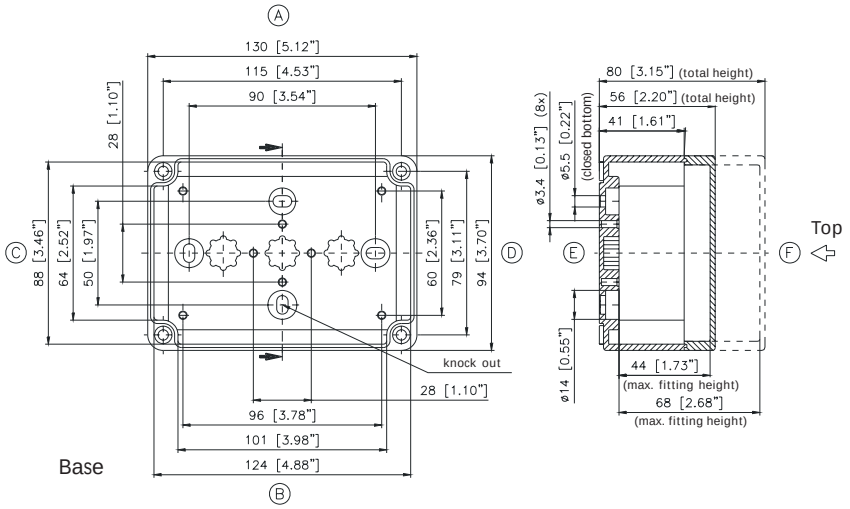

Maximum number of cable glands to ***50262****

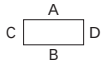

M	Corner dim.	Side A/B	Side C/D	***PG***	Corner dim.	Side A/B	Side C/D
ECO							
12	17.25	5	3	7	17.25	5	3
16	25.30	4	2	9	21.85	4	2
20	27.60	3	2	11	25.30	4	2
25	37.95			13,5	27.60	3	2
32	48.30			16	31.05	3	2
40	60.95			21	37.95		
50	69.00			29	48.30		
63	74.75			36	60.95		

PCI

Pre-embossing for enclosure version		Enclosure side			
PG	M	A	B	C	D
11/16		3	3	2	2
	16/20	3	3	2	2

* Please quote mounting side

«ЭйБиЭн»
Тел.\факс +375(17) 390-51-85 info@abn.by Тел. +375(44) 592-00-86
Тел.\факс +375(17) 390-51-86 www.abn.by

Type: ***60.11 11 . .***

Type	Order No.	Dimensions	Weight	DIN rail length in mm	max. fitting length in mm	Mounting plate (thickness in mm)	External mounting brackets	External hinge* set	Knurled screw set	Spacers set = 8 pcs.
ECO 05-7	***60.11 11 11***	110 x 110 x 66	360 g							
ECO 05-9	***60.11 11 21***	110 x 110 x 90	309 g							
PCI 05-9M	***60.11 11 15***	110 x 110 x 90	400 g							
ECO 05-7t	***60.11 11 12***	110 x 110 x 66	183 g							
ECO 05-9t	***60.11 11 22***	110 x 110 x 90	275 g							
				TS 15/35						
				92	82	2.5	•	•	•	•

Maximum number of cable glands to ***50262****

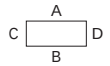

M	Corner dim.	Side A/B	Side C/D	*PG*	Corner dim.	Side A/B	Side C/D
ECO							
12	17.25	8	8	7	17.25	8	8
16	25.30	4	4	9	21.85	3	3
20	27.60	2	2	11	25.30	3	3
25	37.95	2	2	13.5	27.60	2	2
32	48.30	1	1	16	31.05	2	2
40	60.95			21	37.95	2	2
50	69.00			29	48.30		
63	74.75			36	60.95		

PCI

Pre-embossing for enclosure version		Enclosure side			
PG	M	A	B	C	D
16/21		2	1	2	2
	20/25	2	1	2	2

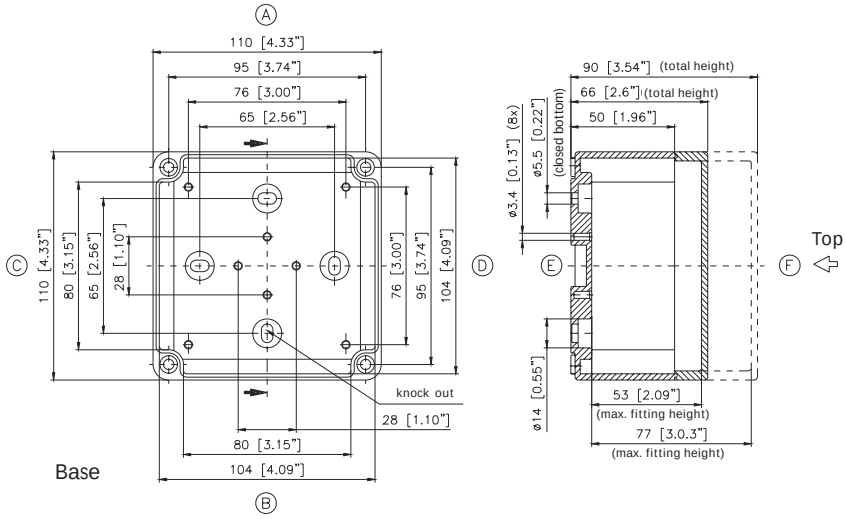

Type: ***60.13 13 . .***

Type	Order No.	Dimensions	Weight	DIN rail length in mm	max. fitting length in mm	Mounting plate (thickness in mm)	External mounting brackets	External hinge* set	Knurled screw set	Spacers set = 8 pcs.
ECO 06-7	***60.13 13 11***	130 x 130 x 75	330 g							
PCI 06-7M	***60.13 13 15***	130 x 130 x 75	227 g							
ECO 06-10	***60.13 13 21***	130 x 130 x 99	345 g							
ECO 06-7t	***60.13 13 12***	130 x 130 x 75	244 g							
ECO 06-10t	***60.13 13 22***	130 x 130 x 99	307 g							
				TS 15/35						
				106	96	2.5	•	•	•	•

Maximum number of cable glands to ***50262****

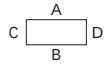

M	Corner dim.	Side A/B	Side C/D	*PG*	Corner dim.	Side A/B	Side C/D
ECO							
12	17.25	13	13	7	17.25	10	10
16	25.30	8	8	9	21.85	8	8
20	27.60	3	3	11	25.30	8	8
25	37.95	3	3	13.5	27.60	3	3
32	48.30	2	2	16	31.05	3	3
40	60.95	1	1	21	37.95	2	2
50	69.00			29	48.30	2	2
63	74.75			36	60.95		

PCI

Pre-embossing for enclosure version		Enclosure side			
PG	M	A	B	C	D
16/21		2	1	2	2
	20/25	2			
	20		3	3	3
	25/32	1			

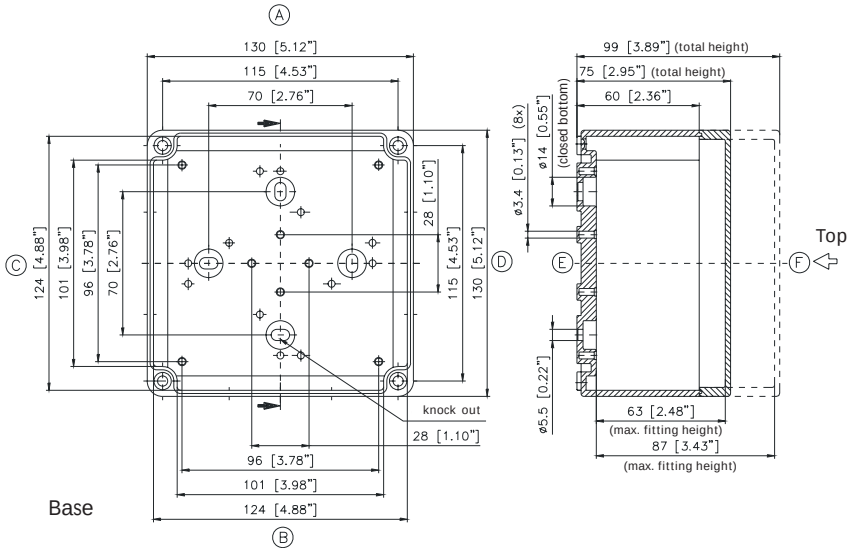

* Please quote mounting side

«ЭйБиЭн»
Тел.\факс +375(17) 390-51-85 info@abn.by Тел. +375(44) 592-00-86
Тел.\факс +375(17) 390-51-86 www.abn.by

Type: ***60.09 18 . .***

Type	Order No.	Dimensions	Weight	DIN rail length in mm	max. fitting length in mm	Mounting plate (thickness in mm)	External mounting brackets	External hinge* set	Knurled screw set	Spacers set = 8 pcs.
ECO 07-6	***60.09 18 11***	94 x 180 x 57	208 g							
PCI 07-6M	***60.09 18 15***	94 x 180 x 57	260 g							
ECO 07-8	***60.09 18 21***	94 x 180 x 81	425 g							
ECO 07-6t	***60.09 18 12***	94 x 180 x 57	217 g							
ECO 07-8t	***60.09 18 22***	94 x 180 x 81	340 g							
				TS 15						
				144	134	2.5	•	•	•	•

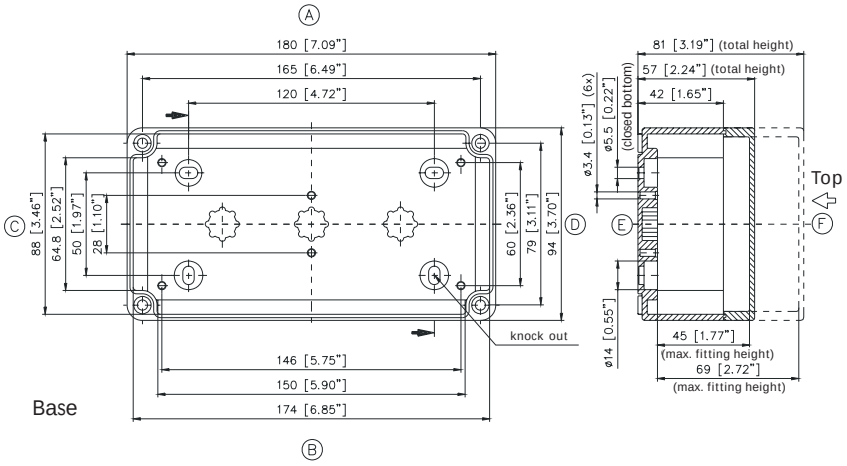

Maximum number of cable glands to ***50262****

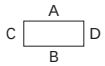

M	Corner dim.	Side A/B	Side C/D	***PG***	Corner dim.	Side A/B	Side C/D
ECO							
12	17.25	8	3	7	17.25	7	3
16	25.30	6	2	9	21.85	6	2
20	27.60	4	2	11	25.30	5	2
25	37.95			13.5	27.60	5	2
32	48.30			16	31.05	4	2
40	60.95			21	37.95		
50	69.00			29	48.30		
63	74.75			36	60.95		

PCI

Pre-embossing for enclosure version		Enclosure side			
PG	M	A	B	C	D
11/16		5	5	2	2
	16/20	5	5	2	2

Type: ***60.11 18 . .***

Type	Order No.	Dimensions	Weight	DIN rail length in mm	max. fitting length in mm	Mounting plate (thickness in mm)	External mounting brackets	External hinge* set	Knurled screw set	Spacers set = 8 pcs.
ECO 08-9	***60.11 18 11***	110 x 180 x 90	396 g							
PCI 08-9M	***60.11 18 15***	110 x 180 x 90	340 g							
ECO 08-11	***60.11 18 21***	110 x 180 x 111	524 g							
PCI 08-11M	***60.11 18 25***	110 x 180 x 111	358 g							
ECO 08-9t	***60.11 18 12***	110 x 180 x 90	340 g							
ECO 08-11t	***60.11 18 22***	110 x 180 x 111	384 g							
				TS 35						
				144	134	2.5	•	•	•	•

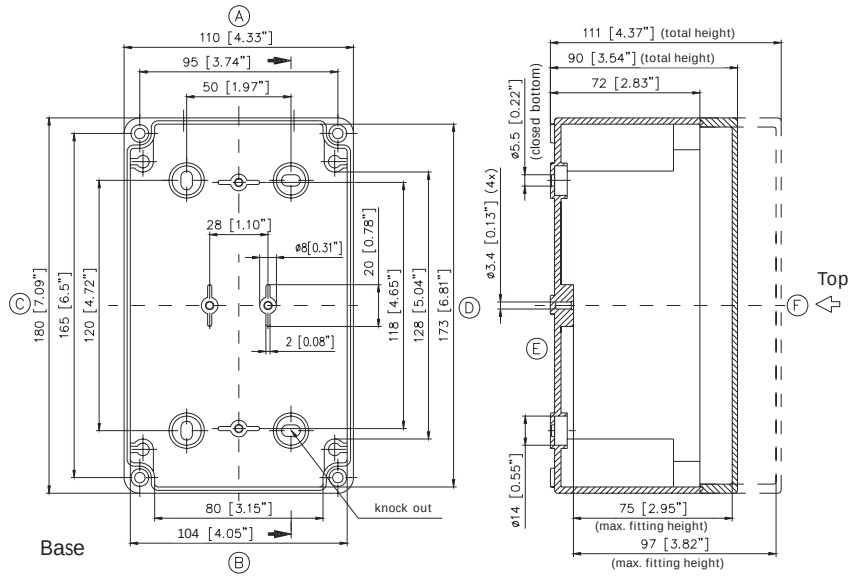

Maximum number of cable glands to ***50262****

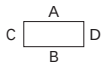

M	Corner dim.	Side A/B	Side C/D	***PG***	Corner dim.	Side A/B	Side C/D
ECO							
12	17.25	12	18	7	17.25	12	18
16	25.30	6	10	9	21.85	6	10
20	27.60	5	8	11	25.30	6	10
25	37.95	5	3	13.5	27.60	6	8
32	48.30	2	3	16	31.05	4	8
40	60.95	1	2	21	37.95	2	3
50	69.00	1	1	29	48.30	1	2
63	74.75			36	60.95	1	1

PCI

Pre-embossing for enclosure version		Enclosure side			
PG	M	A	B	C	D
16		4	4	4	4
16/21		1	1		
21/29				1	1
	20	4	4	4	4
	20/25	1	1		
	32/40			1	1

* Please quote mounting side

«ЭйБиЭн»
Тел.\факс +375(17) 390-51-85 info@abn.by Тел. +375(44) 592-00-86
Тел.\факс +375(17) 390-51-86 www.abn.by

Type: ***60.18 18 . .***

Type	Order No.	Dimensions	Weight	DIN rail length in mm	max. fitting length in mm	Mounting plate (thickness in mm)	External mounting brackets	External hinge* set	Knurled screw set	Spacers set = 8 pcs.
ECO 09-9	***60.18 18 11***	180 x 182 x 90	670 g							
PCI 09-9M	***60.18 18 15***	180 x 182 x 90	454 g							
ECO 09-11	***60.18 18 21***	180 x 182 x 111	712 g							
PCI 09-11M	***60.18 18 25***	180 x 182 x 111	550 g							
ECO 09-16	***60.18 18 31***	180 x 182 x 165	940 g							
ECO 09-9t	***60.18 18 12***	180 x 182 x 90	467 g							
ECO 09-11t	***60.18 18 22***	180 x 182 x 111	529 g							
ECO 09-16t	***60.18 18 32***	180 x 182 x 165	692 g							
				TS 35						
				144	134	2.5	•	•	•	•

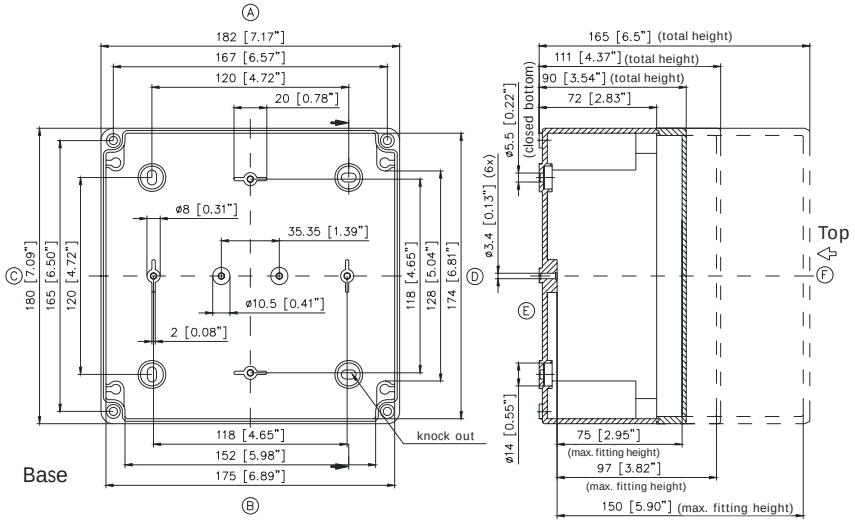

Maximum number of cable glands to ***50262****

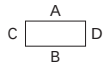

M	Corner dim.	Side A/B	Side C/D	***PG***	Corner dim.	Side A/B	Side C/D
ECO							
12	17.25	21	18	7	17.25	21	18
16	25.30	11	9	9	21.85	12	10
20	27.60	9	7	11	25.30	12	10
25	37.95	7	5	13,5	27.60	10	8
32	48.30	3	3	16	31.05	10	8
40	60.95	3	2	21	37.95	4	3
50	69.00	2	1	29	48.30	3	2
63	74.75			36	60.95	2	2

PCI

Pre-embossing for enclosure version		Enclosure side			
PG	M	A	B	C	D
16		8	8	4	4
21/29		1	1	1	1
	20	8	8	4	4
	32/40	1	1	1	1

Type: ***60.25 36 . .***

Type	Order No.	Dimensions	Weight	DIN rail length in mm	max. fitting length in mm	Mounting plate (thickness in mm)	External mounting brackets	External hinge* set	Knurled screw set	Spacers set = 8 pcs.
ECO 11-11	***60.25 36 11***	254 x 361 x 111	1390 g							
PCI 11-11M	***60.25 36 15***	254 x 361 x 111	1130 g							
ECO 11-16	***60.25 36 21***	254 x 361 x 165	1423 g							
ECO 11-11t	***60.25 36 12***	254 x 361 x 111	1185 g							
ECO 11-16t	***60.25 36 22***	254 x 361 x 165	1960 g							
				TS 15						
				336	326	2.5	•	•	•	•

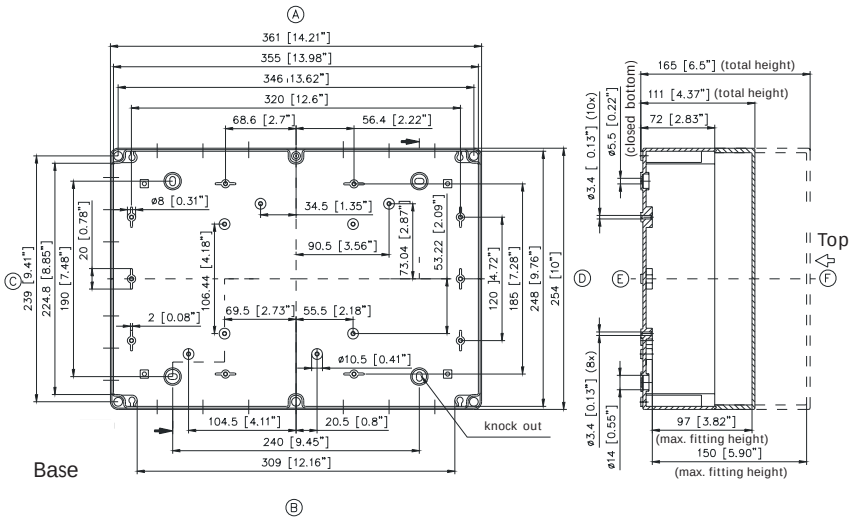

Maximum number of cable glands to ***50262****

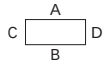

M	Corner dim.	Side A/B	Side C/D	***PG***	Corner dim.	Side A/B	Side C/D
ECO							
12	17.25	42	33	7	17.25	42	33
16	25.30	24	18	9	21.85	24	20
20	27.60	18	15	11	25.30	24	18
25	37.95	14	11	13.5	27.60	20	16
32	48.30	6	5	16	31.05	16	14
40	60.95	4	4	21	37.95	8	6
50	69.00	4	3	29	48.30	6	4
63	74.75			36	60.95	4	3

PCI

Pre-embossing for enclosure version		Enclosure side			
PG	M	A	B	C	D
16		8	8	8	8
16/21				2	2
21/29		2	2	1	1
	20	8	8	8	8
	25/32			2	2
	32/40	2	2	1	1

* Please quote mounting side

«ЭйБиЭн»
Тел.\факс +375(17) 390-51-85 info@abn.by Тел. +375(44) 592-00-86
Тел.\факс +375(17) 390-51-86 www.abn.by

Type: ***60.18 25 . .***

Type	Order No.	Dimensions	Weight	DIN rail length in mm	max. fitting length in mm	Mounting plate (thickness in mm)	External mounting brackets	External hinge* set	Knurled screw set	Spacers set = 8 pcs.
ECO 10-6	***60.18 25 10***	180 x 254 x 63	640 g							
PCI 10-6M	***60.18 25 05***	180 x 254 x 63	640 g							
ECO 10-9	***60.18 25 11***	180 x 254 x 90	840 g							
PCI 10-9M	***60.18 25 15***	180 x 254 x 90	850 g							
ECO 10-11	***60.18 25 21***	180 x 254 x 111	942 g							
PCI 10-11M	***60.18 25 25***	180 x 254 x 111	810 g							
ECO 10-16	***60.18 25 31***	180 x 254 x 165	1250 g							
ECO 10-6t	***60.18 25 09***	180 x 254 x 63	640 g	TS 35						
ECO 10-9t	***60.18 25 12***	180 x 254 x 90	622 g	216	206	2.5	•	•	•	•
ECO 10-11t	***60.18 25 22***	180 x 254 x 111	681 g							
ECO 10-16t	***60.18 25 32***	180 x 254 x 165	1250 g							

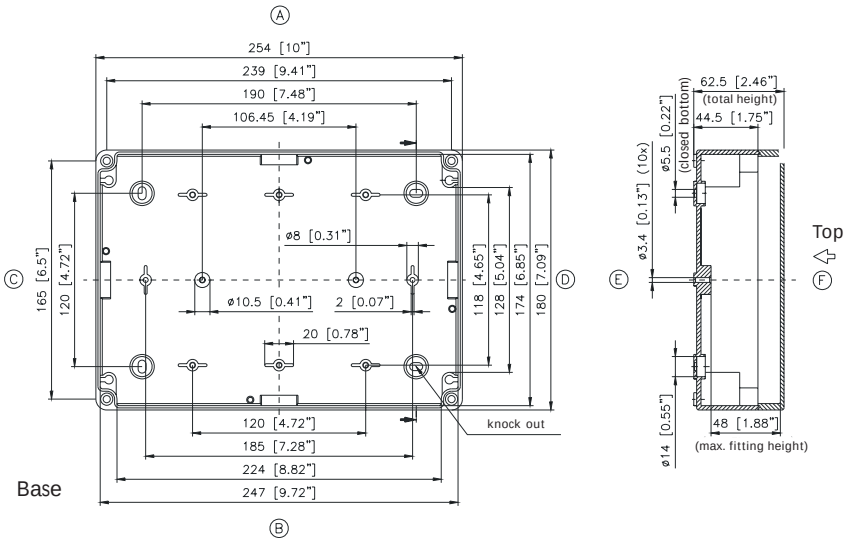

Maximum number of cable glands to ***50262****

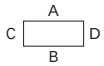

Values apply to lowest construction height

M	Corner dim.	Side A/B	Side C/D	***PG***	Corner dim.	Side A/B	Side C/D
ECO							
12	17.25	5	3	7	17.25	5	3
16	25.30	4	2	9	21.85	4	2
20	27.60	3	2	11	25.30	4	2
25	37.95			13.5	27.60	3	2
32	48.30			16	31.05	3	2
40	60.95			21	37.95		
50	69.00			29	48.30		
63	74.75			36	60.95		

PCI

Pre-embossing for enclosure version		Enclosure side			
PG	M	A	B	C	D
PCI 10-6					
	16/20	6	6	2	2
	25/32	1	1	1	1
PCI 10-9, 10-11					
16		8	8	4	4
16/21		2	2		
21/29		1	1	1	1
	20	8	8	4	4
	25/32	2	2		
	32/40	1	1	1	1

* Please quote mounting side

«ЭйБиЭн»
Тел.\факс +375(17) 390-51-85 info@abn.by Тел. +375(44) 592-00-86
Тел.\факс +375(17) 390-51-86 www.abn.by

UL® / cUL®

- Enclosure system with hidden external hinge
- Standard version or with window
- Polycase version with integrated handle

Included in delivery

Enclosure consisting of base and door; please order door lock separately, press-in inserts in base for internal and external mounting

Technical data

Material:
glass fibre reinforced duroplastic polyester

Colour:
RAL 7038, agate grey
special colour on request

Ingress protection:
IP 66 to EN 60529

Impact resistance:
7 Joule to EN 60079-0

Flammability:
V0 / self-extinguishing, UL 94

Insulation:
fully insulated to VDE 0100

Disruptive strength:
18 KV/mm, IEC 60243-1

Toxicity:
halogen-free

Surface resistance:
$>10^{12}$ Ohm, IEC 60093

Door opening angle:
135°

Temperature range:
-40°C to +100°C
window version: -40°C to +80°C

«ЭйБиЭн»
Тел.\факс +375(17) 390-51-85 info@abn.by Тел. +375(44) 592-00-86
Тел.\факс +375(17) 390-51-86 www.abn.by

Programme range

Polyglas / Polycase	Dimensions (mm) W x L x H	Polyglas	Polyglas with window	Polycase	Polycase with window
Size 1	300 x 400 x 200	***21.30 40 00***	***22.30 40 00***	***23.30 40 00***	***24.30 40 00***
Size 2	400 x 600 x 250	***21.40 60 00***	***22.40 60 00***	***23.40 60 00***	***24.40 60 00***

Note: Enclosure will be supplied without lock, please order separately!

Optional lock (detached)

Triangular lock 8 mm (2 pcs.)	***21.61 00 03***
Square lock 8 mm (2 pcs.)	***21.61 00 04***
Square lock 7 mm (2 pcs.)	***21.61 00 14***
Daimler-Benz lock (2 pcs.)	***21.61 00 06***
Double ward lock 3 mm (2 pcs.)	***21.61 00 07***
Knob (2 pcs.)	***21.61 00 01***
Knob with lock (2 pcs.)	***21.61 00 02***

Accessories (loose)

Mounting plate for size 1 (galvanized sheet steel)	***10.01 12 03***
Mounting plate for size 2 (galvanized sheet steel)	***10.01 12 04***
External fastening lugs (4 pcs.)	***10.03 10 09***
Hole lids for fastening through base (4 pcs.)	***10.03 90 01***
Socket spanner, triangular 8 mm	***10.04 70 03***
Socket spanner, square 8 mm	***10.04 70 04***
Socket spanner, square 7 mm	***10.04 70 14***
Socket spanner Daimler-Benz	***10.04 70 06***
Socket spanner, two-way 3 mm	***10.04 70 07***

Accessories

Mounting plates

Order No.	A	B	C	for size
10.01 12 03	2	210	345	300 x 400 mm
10.01 12 04	2,5	310	345	400 x 600 mm

External mounting brackets

Order No. ***10.03 10 09***

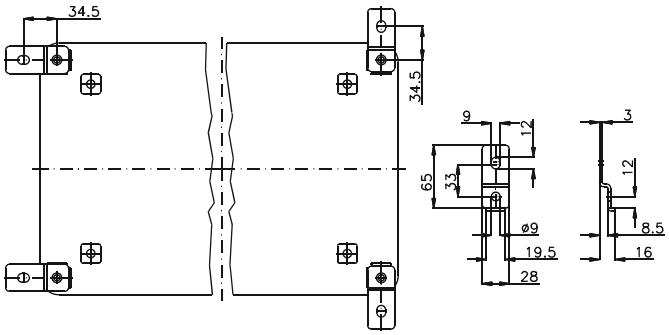

«ЭйБиЭн»
Тел.\факс +375(17) 390-51-85 info@abn.by Тел. +375(44) 592-00-86
Тел.\факс +375(17) 390-51-86 www.abn.by

Dimensions

Polyglas

Type	A	B	C	D	E	F	G	H	I	J	K	L	M	N	O	P
21.30 40	300	305	400	405	200	285	345	210	370	254	132	169	220	300	270	370
21.40 60	400	406	600	605	250	478	545	310	566	352	181	217	320	500	370	570

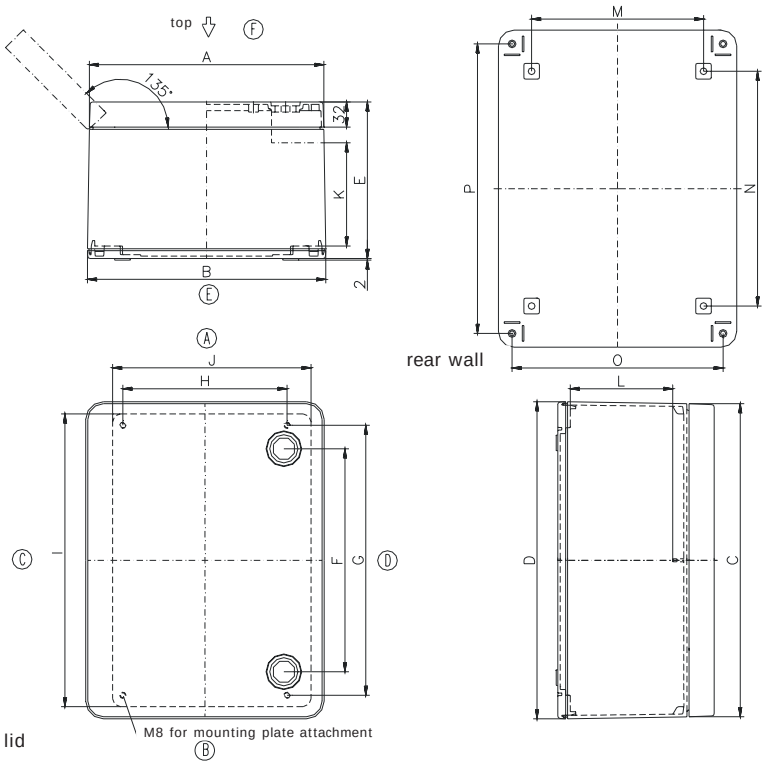

Polycase

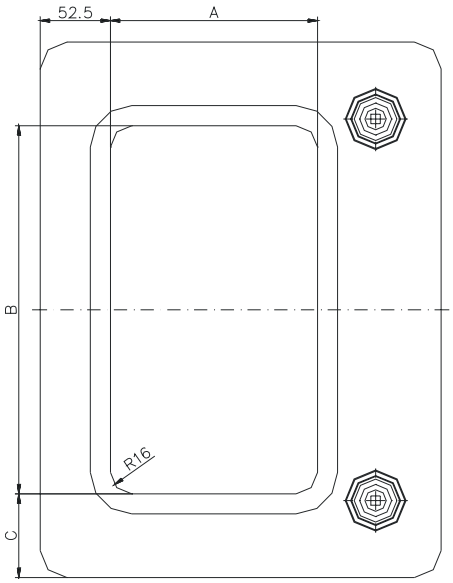

Window

Type	A	B	C
22.30 40	153	275	62.5
22.40 60	250	450	75

«ЭйБиЭн»
Тел.\факс +375(17) 390-51-85 info@abn.by Тел. +375(44) 592-00-86
Тел.\факс +375(17) 390-51-86 www.abn.by

Applications

«ЭйБиЭн»
Тел.\факс +375(17) 390-51-85 info@abn.by Тел. +375(44) 592-00-86
Тел.\факс +375(17) 390-51-86 www.abn.by

UL® / cUL®

- Small polyglas enclosure with hidden external hinge for MCR technology
- Standard version or with window

Technical data

Material:
glass fibre reinforced duroplastic polyester

Colour:
RAL 7038, agate grey
special colour on request

Ingress protection:
IP 66 to EN 60529

Impact resistance:
7 Joule to EN 60079-0

Flammability:
V0 / self-extinguishing, UL 94

Insulation:
fully insulated to VDE 0100

Disruptive strength:
18 KV/mm, IEC 60243-1

Toxicity:
halogen-free

Surface resistance:
$>10^{12}$ Ohm, IEC 60093

Door opening angle:
120°

Temperature range:
-40°C to +100°C
window version: -40°C to +80°C

Included in delivery

Enclosure consisting of base and door; please order door lock separately, press-in inserts in base for internal mounting

«ЭйБиЭн»
Тел.\факс +375(17) 390-51-85 info@abn.by Тел. +375(44) 592-00-86
Тел.\факс +375(17) 390-51-86 www.abn.by

Programme range

Mini-Polyglas	Dimensions (mm) W x L x H	Mini-Polyglas	Mini-Polyglas with window	Mounting plate (sheet steel, detached)
Size 1	120 x 200 x 100	***21.12 20 00***	***22.12 20 00***	***10.01 12 07***
Size 2	160 x 260 x 100	***21.16 26 00***	***22.16 26 00***	***10.01 12 08***
Size 3	160 x 340 x 100	***21.16 34 00***	***22.16 34 00***	***10.01 12 09***
Size 4	200 x 150 x 100	***21.20 15 00***	***22.20 15 00***	***10.01 12 10***
Size 5	200 x 200 x 170	***21.20 20 00***	***22.20 20 00***	***10.01 12 01***
Size 6	200 x 300 x 170	***21.20 30 00***	***22.20 30 00***	***10.01 12 02***

Note: Enclosure supplied without closing screws, order separately.

Optional closing screws (detached)

Triangular screw 8 mm (2 pcs.)	***21.63 00 03***
Square screw 8 mm (2 pcs.)	***21.63 00 04***
Square screw 6 mm (2 pcs.)	***21.63 00 24***
Philips screw (2 pcs.)	***21.63 00 05***

Accessories (loose)

External mounting brackets (4 pcs.)	***10.03 10 08***
Socket spanner, triangular 8 mm	***10.04 70 03***
Socket spanner, square 8 mm	***10.04 70 04***
Philips socket spanner	***10.04 70 05***

Accessories

Mounting plates

Order No.	for type	A	B	C	D	E	F	G
10.01 12 07	21.12 20	169	107	-	95	157	58	70
10.01 12 08	21.16 26	229	147	-	135	217	98	110
10.01 12 09	21.16 34	309	147	-	135	297	98	110
10.01 12 10	21.20 15	118.5	187	88	175	-	-	150
10.01 12 01	21.20 20	165.5	182	135	170	-	-	138
10.01 12 02	21.20 30	265.5	182	235	170	-	-	138

External mounting brackets
set = 4 pcs.

Order No. ***10.03 10 08***

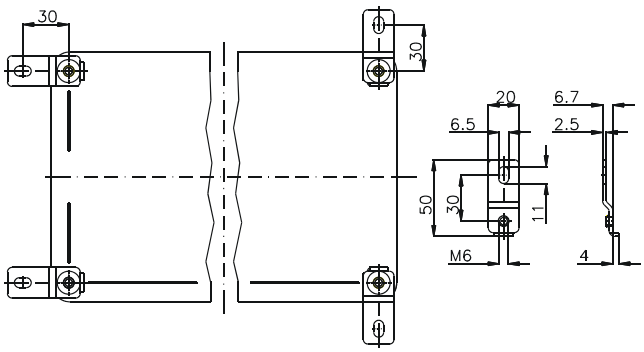

«ЭйБиЭн»
Тел.\факс +375(17) 390-51-85 info@abn.by Тел. +375(44) 592-00-86
Тел.\факс +375(17) 390-51-86 www.abn.by

Dimensions

Type	A	B	C	D	E	F	G	I	K	L	M	N	H_U	H_{Ges}
21.12 20	201.5/155*	123/120.5*	178	98	113/111*	173.5	190	7	157	58	95	78	70	100
21.16 26	261.5/259*	163/160.5*	238	138	153/151*	233.5	250	8	217	98	118	118	70	100
21.16 34	341.5/339*	163/160.5*	318	138	153/151*	313.5	330	7.5	297	98	118	118	70	100
21.20 15	151.5/149*	203/200.5*	128	178	193/191*	123.5	140	8.5	88	175	158	158	70	100
21.20 20	200/197*	200/197*	175	175	190/187*	173	188	8.5	135	170	149	149	138	168
21.20 30	300/297*	200/197*	275	175	190/187*	273	288	8.5	235	170	149	149	138	168

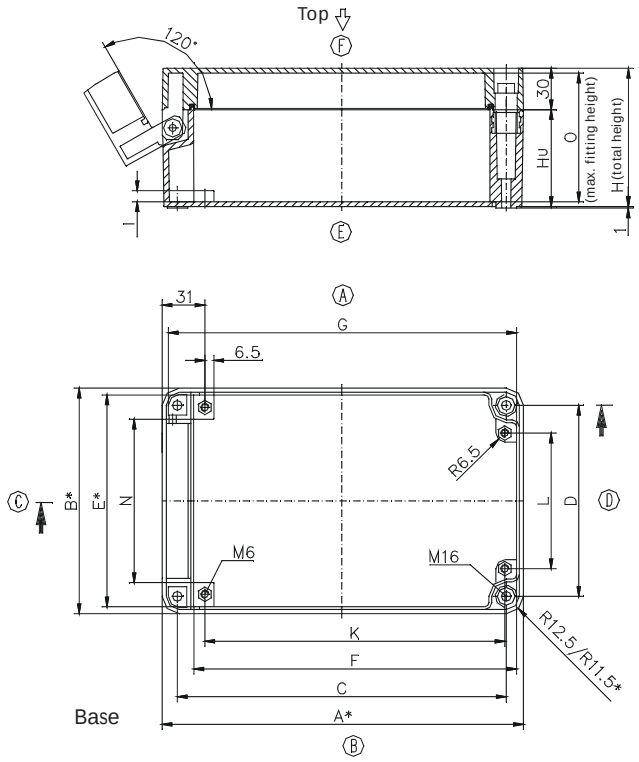

* = Conical form tapering downwards
Free dimensions-tolerance to DIN 16901 - 130

Windows

Type	A	B	C
22.12 20 00	116	66	45
22.16 26 00	176	108	45
22.16 34 00	256	108	45
22.20 15 00	66	147	45
22.20 20 00	120	120	45
22.20 30 00	210	120	45

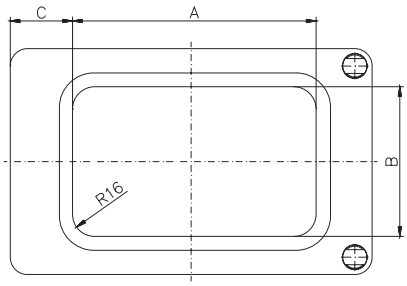

«ЭйБиЭн»
Тел.\факс +375(17) 390-51-85 info@abn.by Тел. +375(44) 592-00-86
Тел.\факс +375(17) 390-51-86 www.abn.by

Applications

«ЭйБиЭн»
Тел.\факс +375(17) 390-51-85 info@abn.by Тел. +375(44) 592-00-86
Тел.\факс +375(17) 390-51-86 www.abn.by

- Enclosure system with hinged lid for MCR technology
- Standard version or with window panel or transparent door (ABS)

Included in delivery

Enclosure consisting of base and door, please order door lock separately, press-in inserts in base for internal and external mounting

Technical data

Material:

glass fibre reinforced duroplastic polyester / ABS

Colour:

Polyester: RAL 7032, pebble grey
ABS: RAL 7035, light grey
special colour on request

Ingress protection:

IP 65 to EN 60529

Impact resistance:

7 Joule to EN 60079-0

Flammability:

Polyester: V0 / self-extinguishing, UL 94
ABS: HB / UL 94

Insulation:

fully insulated to VDE 0100

Disruptive strength:

Polyester: 26 KV/mm, IEC 60243-1
ABS: 24 KV/mm, IEC 60243-1

Toxicity:

halogen-free

Surface resistance:

Polyester: 4 x 10^{15} Ohm, IEC 60093
ABS: 4 x 10^{14} Ohm, IEC 60093

Door opening angle:

135°

Temperature range:

Polyester: -55°C to +90°C
with window: -55°C to +80°C
ABS: -40°C to +70°C

«ЭйБиЭн»
Тел.\факс +375(17) 390-51-85 info@abn.by Тел. +375(44) 592-00-86
Тел.\факс +375(17) 390-51-86 www.abn.by

Polyester / ABS cabinet

Programme range

	Dimensions (mm) W x L x H	ABS	ABS with transparent door	GFK	GFK with window
Size 1	200 x 250 x 150	***21.20 25 90***	***22.20 25 90***	-	-
Size 2	250 x 300 x 170	***21.25 30 90***	***22.25 30 90***	-	-
Size 1	200 x 250 x 150	-	-	***21.20 25 00***	***22.20 25 00***
Size 2	250 x 300 x 170	-	-	***21.25 30 00***	***22.25 30 00***

Note: Enclosure supplied without lock, please order separately.

Optional lock (detached)

Triangular lock 8 mm (1 pc.)	***21.62 00 03***
Square lock 8 mm (1 pc.)	***21.62 00 04***
Knob (1 pc.)	***21.62 00 01***
Knob with lock (1 pc.)	***21.62 00 02***

Accessories (detached)

Mounting plate for size 1 (hard paper)	***10.01 12 05***
Mounting plate for size 2 (hard paper)	***10.01 12 06***
Internal aluminium front plate with stud bolt for size 1	***10.01 31 01***
Internal aluminium front plate with stud bolt for size 2	***10.01 31 02***
External mounting brackets (4 pcs.)	***10.03 10 10***
Hole covers for fastening through the cabinet bottom (4 pcs.)	***10.03 90 02***
Socket spanner, triangular 8 mm	***10.04 70 03***
Socket spanner, square 8 mm	***10.04 70 04***

«ЭйБиЭн»
Тел.\факс +375(17) 390-51-85 info@abn.by Тел. +375(44) 592-00-86
Тел.\факс +375(17) 390-51-86 www.abn.by

Accessories

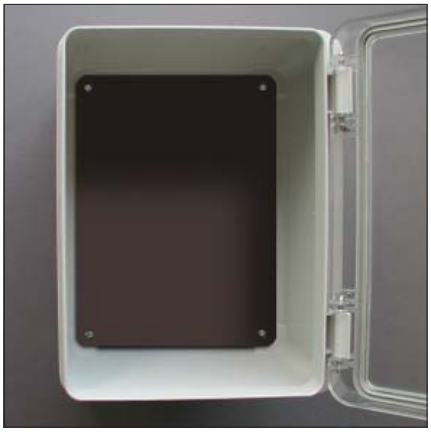

Mounting plate

Order No.	A	B	C	D	for type
10.01 12 05	173	234	155	210	21.20 25
10.01 12 06	221	284	205	260	21.25 30

Internal front plate with stud bolt

Order No.	A	B	C	D	for type
10.01 31 01	173	234	155	210	21.20 25
10.01 31 02	221	284	205	260	21.25 30

External brackets

Order No. ***10.03 10 10***

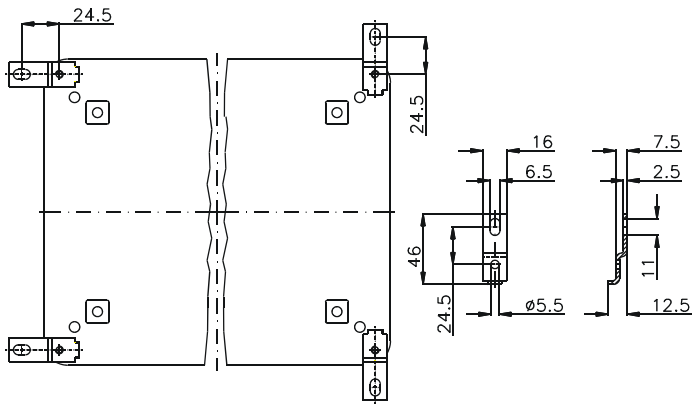

«ЭйБиЭн»
Тел.\факс +375(17) 390-51-85 info@abn.by Тел. +375(44) 592-00-86
Тел.\факс +375(17) 390-51-86 www.abn.by

Dimensions

Type	A	B	C	D	E	F	G	K	L	M	M	O	H_I	H_U	$H_{Ges.}$
21./22.20 25 00	200	250	155	210	174	236,5	194	180	230	130	180	100	144	122	150
21./22.25 30 00	250	300	205	260	223	285	243	230	280	180	230	119	164	142	170
21./22.20 25 90	200	250	155	210	174	236.5	194	180	230	130	180	100	144	122	150
21./22.25 30 90	250	300	205	260	223	285	243	230	280	180	230	119	164	142	170

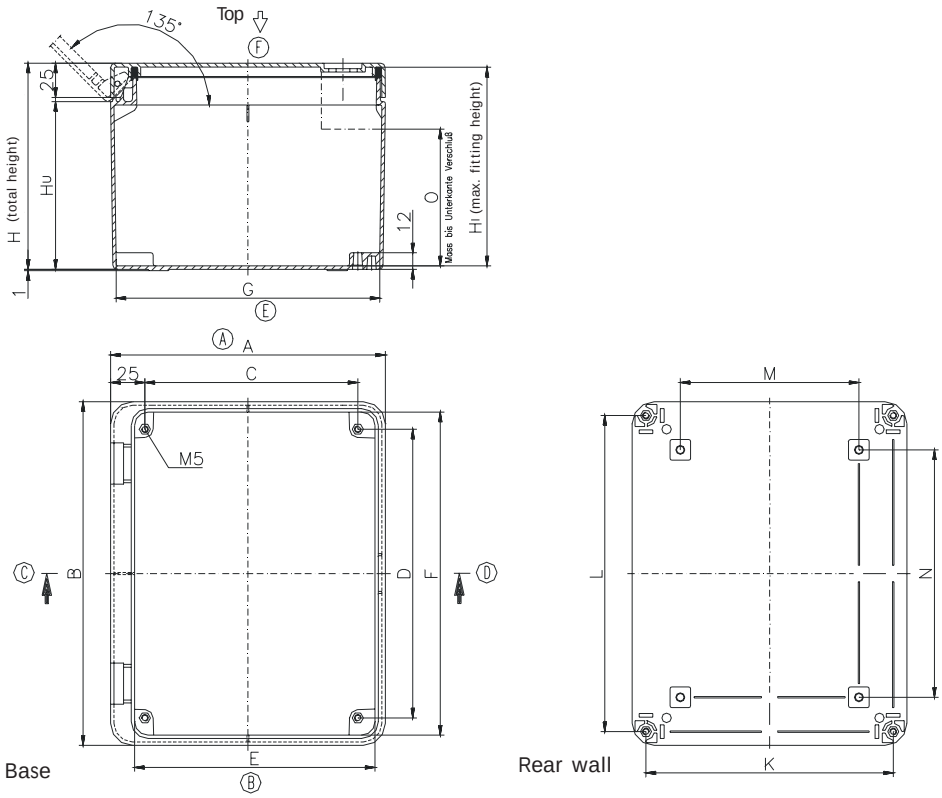

Window (with polyester version)

Type	A	B	C	D
21.20 25	100	192	38	29
21.25 30	145	242	43	29

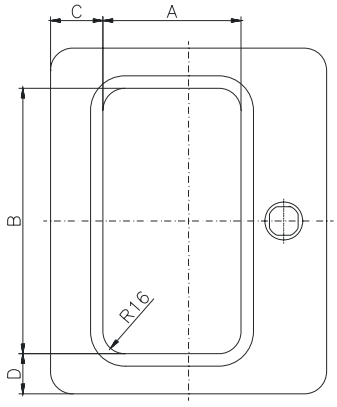

«ЭйБиЭн»
Тел.\факс +375(17) 390-51-85 info@abn.by Тел. +375(44) 592-00-86
Тел.\факс +375(17) 390-51-86 www.abn.by

- Break proof polyamide enclosure for individual fitting of 22.5 mm control switches (lid mounting or base mounting) and pilote lamps
- Execution with 22.5 mm lid holes or without lid holes
- Gland holes M20 / M25 on two sides

Technical data

Material:
Polyamide 6

Ingress protection:
IP 65, EN 60529

Impact resistance:
7 Joule, EN 60079-0

Surface resistance:
10^{12} Ohm, IEC 60093

Flammability:
V2, UL 94

Farbton:
Base: RAL 9005, jet black
Top: RAL 7035, light grey

Temperature range:
-20°C to +60°C

Including in delivery:

Enclosure consisting of lid and base with screws base with M20 and M25 hole for cable entry; mounting possibility of TS 35/7,5 mm DIN rails and adaption plates of several manufacturer

«ЭйБиЭн»
Тел.\факс +375(17) 390-51-85 info@abn.by Тел. +375(44) 592-00-86
Тел.\факс +375(17) 390-51-86 www.abn.by

Programme range

Order No.	Type	Dimensions (mm)	quantity holes 22.5 in lid
31.10 01 00	CS Box 110-0	110 x 110 x 85	0
31.10 01 01	CS Box 110-1	110 x 110 x 85	1
31.10 02 00	CS Box 160-0	110 x 160 x 85	0
31.10 02 02	CS Box 160-2	110 x 160 x 85	2
31.10 02 03	CS Box 160-3	110 x 160 x 85	3
31.10 03 00	CS Box 230-0	110 x 230 x 85	0
31.10 03 04	CS Box 230-4	110 x 230 x 85	4
31.10 03 05	CS Box 230-5	110 x 230 x 85	5

Accessories

31.10 99 01	CS Box 110 adapter plate Telemechanique
31.10 99 02	CS Box 160 adapter plate Telemechanique
31.10 99 03	CS Box 230 adapter plate Telemechanique
31.10 99 04	CS Box lid safety strip (set = 2 pcs.)
31.10 99 05	CS Box blind plug set (1 x M25; 1 x M20)
10.06 14 91	DIN rail TS35/7,5 CS Box 110
10.06 14 92	DIN rail TS35/7,5 CS Box 160
10.06 14 93	DIN rail TS35/7,5 CS Box 230

Terminal mounting

	Phoenix															Earth conductor connections												
DIN rail TS 15	X	X	X																									
DIN rail TS 35				X	X	X	X	X	X	X	X	X	X	X	X													
Voltage (V)	250	400	500	500	800	800	800	800	800	800	1000	1000	1000	1000	1000													
Current (A)	24	32	41	17	24	32	41	57	76	101	150	150	232	309	415													
Nom. cross section (mm²)	2.5	2.5	4	1.5	2.5	2.5	4	6	10	16	35	50	95	150	240													
Terminal width (mm)	5.2	5.2	6.2	4.2	5.2	5.2	6.2	8.2	10.2	12.2	15.2	20	25	31	36													
Terminal type / Type	MBK 2,5 E	MBK 3 / E-Z	MBK 5 / E-Z	UK 1,5 N	UK 2,5 N	UK 3 N	UK 5 N	UK 6 N	UK 10 N	UK 16 N	UK 35	UKH 50	UKH 95	UKH 150	UKH 240	MSLKG 5 insulated, green/yellow	USLKG 1,5 N insulated green/yellow	USLKG 2,5 N insulated green/yellow	USLKG 6 N insulated green/yellow	USLKG 10 N insulated green/yellow	USKLG 16 N insulated green/yellow	USLKG 3 insulated green/yellow	USLKG 5 insulated green/yellow	USLKG 50 insulated green/yellow	USLKG 95 insulated green/yellow		Earthing bar 2.5 mm² with cable lug max. 10 mm²	Earthing screw M4 with cable lug max. 6 mm²	M6 with cable lug max. 35 mm²
31.10 01 00	14	14	11	17	14	14	11	9	7																			
31.10 01 01	14	14	11	17	14	14	11	9	7								as required											
31.10 02 00	23	23	20	29	23	23	20	15	12																			
31.10 02 02	23	23	20	29	23	23	20	15	12																			
31.10 02 03	23	23	20	29	23	23	20	15	12																			
31.10 03 00	37	37	31	46	37	37	31	23	19																			
31.10 03 04	37	37	31	46	37	37	31	23	19																			
31.10 03 05	37	37	31	46	37	37	31	23	19																			

«ЭйБиЭн»
Тел.\факс +375(17) 390-51-85 info@abn.by Тел. +375(44) 592-00-86
Тел.\факс +375(17) 390-51-86 www.abn.by

Terminal mounting

	Weidmüller																			Earth conductor connections									
DIN rail TS 15				X	X	X	X																						
DIN rail TS 35								X	X	X	X	X	X	X	X	X	X	X	X										
Voltage (V)	400	400	400	250	400	250	400	500	800	800	800	1000	1000	1000	1000	1000	1000	1000	1000										
Current (A)	32	32	32	17	17	24	32	24	24	32	41	57	76	125	192	232	269	309	415										
Nom. cross section (mm²)	4	4	4	1.5	1.5	2.5	4	2.5	2.5	4	6	10	16	35	70	95	120	150	240										
Terminal width (mm)	38	52	92	5.1	3.5	5.1	6.1	5.1	5.1	6.1	8.1	10	12	16	20.5	27	27	32	36										
Terminal type / Type	BK 4 (4-pole)	BK 6 (6-pole)	BK 12 (12-pole)	AKZ 1,5	WDU 1,5 / R 3,5	AKZ 2,5	AKZ 4	WDU 2,5 N	WDU 2,5	WDU 4	WDU 6	WDU 10	WDU 16	WDU 35	WDU 70 N	WDU 70 / 95	WDU 95 / 120 N	WDU 120 / 150	WDU 240	WPE 2.5 green/yellow	WPE 4 green/yellow	WPE 6 green/yellow	WPE 10 green/yellow	WPE 16 green/yellow	WPE 35 green/yellow	WPE 70 / 95 green/yellow	Earthing bar 2.5 mm² with cable lug max. 10 mm²	Earthing screw M4 with cable lug max. 6 mm²	M6 with cable lug max. 35 mm²
31.10 01 00				14	17	14	11	14	14	11	9	7																	
31.10 01 01				14	17	14	11	14	14	11	9	7									as required								
31.10 02 00				23	29	23	20	23	23	20	15	12																	
31.10 02 02				23	29	23	20	23	23	20	15	12																	
31.10 02 03				23	29	23	20	23	23	20	15	12																	
31.10 03 00				37	46	37	31	37	37	31	23	19																	
31.10 03 04				37	46	37	31	37	37	31	23	19																	
31.10 03 05				37	46	37	31	37	37	31	23	19																	

Type: ***31.10 01 00*** External dimensions: ***110 x 110 x 85 mm*** Weight: ***250 g***

DIN rail length in mm	max. fitting length in mm	Mounting plate (thickness in mm)	External mounting brackets	Lid safety strip	EMC version	Allen lid screws	Silicone lid seal	Sealable lid screws
TS 35								
100	72			•	•		•	

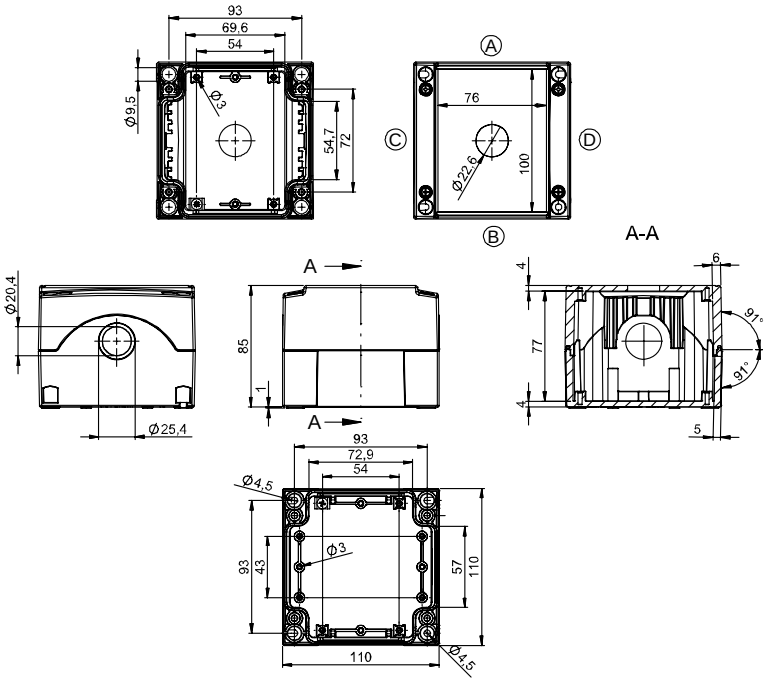

Maximum number of cable glands to ***DIN 50262****

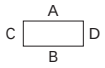

M	Corner dim.	Side A/B	Side C/D	***PG***	Corner dim.	Side A/B	Side C/D
12	17,25	20	1	7	17,25	20	1
16	25,30	8	1	9	21,85	15	1
20	27,60	7	1	11	25,30	8	1
25	37,95	4	1	13,5	27,60	7	1
32	48,30			16	31,05	6	1
40	60,95			21	37,95	4	
50	69,00			29	48,30		
63	74,75			36	60,95		
				42	69,00		
				48	74,75		

«ЭйБиЭн»
Тел.\факс +375(17) 390-51-85 info@abn.by Тел. +375(44) 592-00-86
Тел.\факс +375(17) 390-51-86 www.abn.by

Type: **31.10 02 00** External dimensions: ***110 x 160 x 85 mm*** Weight: ***350 g***

DIN rail length in mm	max. fitting length in mm	Mounting plate (thickness in mm)	External mounting brackets	Lid safety strip	EMC version	Allen lid screws	Silicone lid seal	Sealable lid screws
TS 35								
150	122			•	•		•	

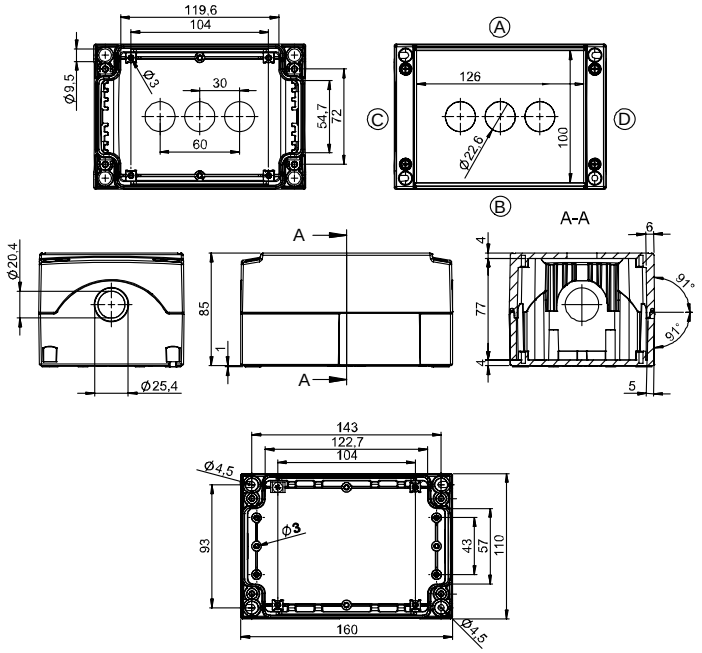

Maximum number of cable glands to ***DIN 50262****

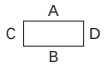

M	Corner dim.	Side A/B	Side C/D	*PG*	Corner dim.	Side A/B	Side C/D
12	17,25	28	1	7	17,25	27	1
16	25,30	12	1	9	21,85	18	1
20	27,60	12	1	11	25,30	12	1
25	37,95	5	1	13,5	27,60	12	1
32	48,30	3	1	16	31,05	10	1
40	60,95			21	37,95	5	1
50	69,00			29	48,30	3	
63	74,75			36	60,95		
				42	69,00		
				48	74,75		

Type: **31.10 03 00** External dimensions: ***110 x 230 x 85 mm*** Weight: ***440 g***

DIN rail length in mm	max. fitting length in mm	Mounting plate (thickness in mm)	External mounting brackets	Lid safety strip	EMC version	Allen lid screws	Silicone lid seal	Sealable lid screws
TS 35								
220	192			•	•		•	

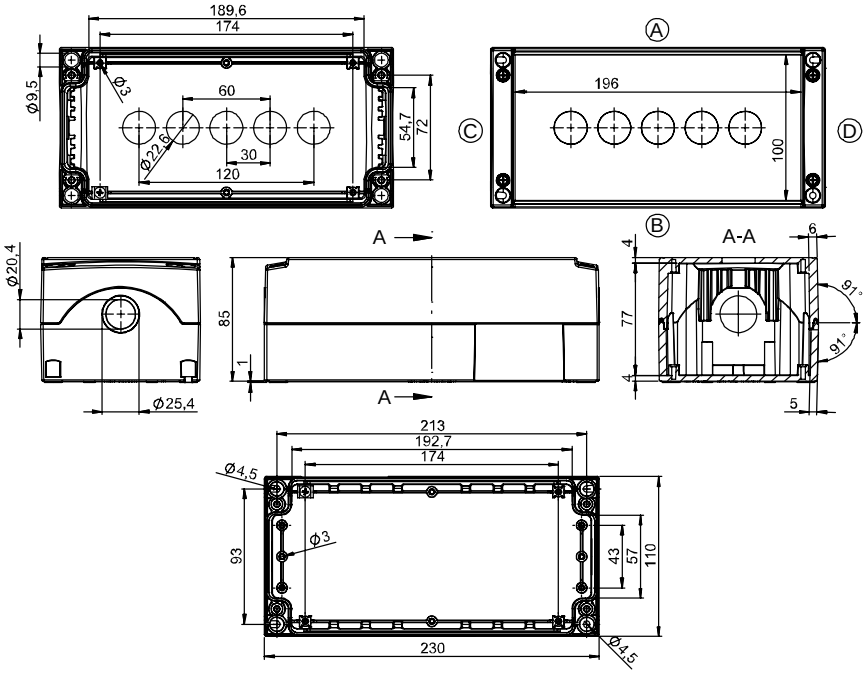

Maximum number of cable glands to ***DIN 50262****

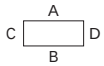

M	Corner dim.	Side A/B	Side C/D	*PG*	Corner dim.	Side A/B	Side C/D
12	17,25	20	1	7	17,25	20	1
16	25,30	8	1	9	21,85	15	1
20	27,60	7	1	11	25,30	8	1
25	37,95	4	1	13,5	27,60	7	1
32	48,30			16	31,05	6	1
40	60,95			21	37,95	4	
50	69,00			29	48,30		
63	74,75			36	60,95		
				42	69,00		
				48	74,75		

«ЭйБиЭн»
Тел.\факс +375(17) 390-51-85 info@abn.by Тел. +375(44) 592-00-86
Тел.\факс +375(17) 390-51-86 www.abn.by

- Cable glands, blind plugs and counter-nuts of polyamide and brass
- High protection type
- Metric and PG version

Technical data

Material:

Polyamide / brass

Colour:

Polyamide: RAL 7035, light grey

Brass: nickel plated surface

Ingress protection:

up to IP 68

«ЭйБиЭн»
Тел.\факс +375(17) 390-51-85 info@abn.by Тел. +375(44) 592-00-86
Тел.\факс +375(17) 390-51-86 www.abn.by

Cable glands

Designation:	Cable gland Polyamide
Material:	Polyamide PA 6 V-2
Colour:	RAL 7035, light grey
Sealing insert:	NBR
External seal:	-
Ingress protection:	IP 68 - 5 bar
Temperature range:	-20ºC to +100ºC

Type	Cable Ø	VPE	Order No.
PG			
7	3 - 6,5	100	***08.02 02 07***
9	4 - 8	100	***08.02 02 09***
11	5 - 10	100	***08.02 02 11***
13.5	6 - 12	100	***08.02 02 13***
16	10 - 14	50	***08.02 02 16***
21	13 - 18	50	***08.02 02 21***
29	18 - 25	25	***08.02 02 29***
36	22 - 32	10	***08.02 02 36***
42	30 - 38	5	***08.02 02 42***
48	34 - 44	5	***08.02 02 48***
Metric			
M 12 x 1.5	3 - 6	100	***08.08 05 12***
M 16 x 1.5	5 - 10	100	***08.08 05 16***
M 20 x 1.5	8 - 13	100	***08.08 05 20***
M 25 x 1.5	11 - 17	100	***08.08 05 25***
M 32 x 1.5	15 - 21	50	***08.08 05 32***
M 40 x 1.5	19 - 28	10	***08.08 05 40***
M 50 x 1.5	26 - 35	5	***08.08 05 50***
M 63 x 1.5	32 - 42	5	***08.08 05 63***

Designation:	Blind plug
Material:	Polyamide
Colour:	RAL 7035, light grey
Sealing insert:	-
External seal:	-
Ingress protection:	IP 54 IP 66 with seal
Temperature range:	-30ºC to +100ºC

Type	Cable Ø	VPE	Order No.
PG			
7		100	***08.02 06 07***
9		100	***08.02 06 09***
11		100	***08.02 06 11***
13,5		100	***08.02 06 13***
16		100	***08.02 06 16***
21		100	***08.02 06 21***
29		50	***08.02 06 29***
Metric			
M 12 x 1.5		100	***08.09 05 12***
M 16 x 1.5		100	***08.09 05 16***
M 20 x 1.5		100	***08.09 05 20***
M 25 x 1.5		100	***08.09 05 25***
M 32 x 1.5		50	***08.09 05 32***
M 40 x 1.5		50	***08.09 05 40***

Designation:	Counter-nut
Material:	Polyamide
Colour:	RAL 7035, light grey
Sealing insert:	-
External seal:	-
Ingress protection:	-
Temperature range:	-30ºC to +100ºC

Type	Cable Ø	VPE	Order No.
PG			
7		100	***08.02 09 07***
9		100	***08.02 09 09***
11		100	***08.02 09 11***
13,5		100	***08.02 09 13***
16		50	***08.02 09 16***
21		50	***08.02 09 21***
29		25	***08.02 09 29***
36		25	***08.02 09 36***
42		25	***08.02 09 42***
48		25	***08.02 09 48***
Metric			
M 12 x 1.5		100	***08.09 07 12***
M 16 x 1.5		100	***08.09 07 16***
M 20 x 1.5		100	***08.09 07 20***
M 25 x 1.5		100	***08.09 07 25***
M 32 x 1.5		50	***08.09 07 32***
M 40 x 1.5		50	***08.09 07 40***
M 50 x 1.5		5	***08.09 07 50***
M 63 x 1.5		5	***08.09 07 63***

«ЭйБиЭн»
Тел.\факс +375(17) 390-51-85 info@abn.by Тел. +375(44) 592-00-86
Тел.\факс +375(17) 390-51-86 www.abn.by

Designation: PE seals
Material: HP Polyethylene
Colour: transparent
Sealing insert: -
External sealing ring: -
Ingress protection: -
Temperature range: -30ºC to +70ºC

metric on request

Type	Cable Ø	VPE	Order No.
PG			
7		50	***08.00 08 07***
9		50	***08.00 08 09***
11		50	***08.00 08 11***
13.5		50	***08.00 08 13***
16		50	***08.00 08 16***
21		50	***08.00 08 21***
29		50	***08.00 08 29***
36		50	***08.00 08 36***
42		50	***08.00 08 42***

Designation: PA with bending protection
Material: Polyamide
Colour: RAL 9005, jet black
Ingress protection: IP 68 - 5 bar
Temperature range: -20°C to +100°C

Type	Cable Ø	VPE	Order No.
PG			
7		50	***08.11 01 07***
9		50	***08.11 01 09***
11		50	***08.11 01 11***
13.5		50	***08.11 01 13***
16		25	***08.11 01 16***
21		20	***08.11 01 21***
Metrisch			
M 12 x 1.5		50	***08.10 01 12***
M 16 x 1.5		50	***08.10 01 16***
M 20 x 1.5		50	***08.10 01 20***
M 25 x 1.5		20	***08.10 01 25***

Designation: MS cable gland
Material: brass nickel-plated
Sealing insert: NBR
External seal: O ring, NBR
Ingress protection: IP 68
Temperature range: -40ºC to +100ºC, briefly 120°C

Type	Cable Ø	VPE	Order No.
PG			
7	3 - 6,5	50	***08.04 03 07***
9	4 - 8	50	***08.04 03 09***
11	5 - 10	50	***08.04 03 11***
13.5	6 - 12	50	***08.04 03 13***
16	10 - 14	25	***08.04 03 16***
21	13 - 18	25	***08.04 03 21***
29	18 - 25	20	***08.04 03 29***
36	22 - 32	1	***08.04 03 36***
42	30 - 38	1	***08.04 03 42***
48	34 - 44	1	***08.04 03 48***
Metric			
M 12 x 1.5	3 - 6,5	50	***08.08 04 12***
M 16 x 1.5	4 - 8	50	***08.08 04 16***
M 20 x 1.5	6 - 12	50	***08.08 04 20***
M 25 x 1.5	10 - 14	25	***08.08 04 25***
M 32 x 1.5	13 - 18	20	***08.08 04 32***
M 40 x 1.5	18 - 25	1	***08.08 04 40***
M 50 x 1.5	22 - 32	1	***08.08 04 50***
M 63 x 1.5	34 - 44	1	***08.08 04 63***

«ЭйБиЭн»
Тел.\факс +375(17) 390-51-85 info@abn.by Тел. +375(44) 592-00-86
Тел.\факс +375(17) 390-51-86 www.abn.by

Cable glands

Designation:	MS cable gland EMC
Material:	brass nickel-plated
Sealing insert:	NBR
External seal:	NBR
Ingress protection:	IP 68
Temperature range:	-30°C to +100°C, briefly 120°C

Type	Cable Ø	VPE	Order No.
PG			
7	3 - 6,5	50	***08.07 00 07***
9	4 - 8	50	***08.07 00 09***
11	5 - 10	50	***08.07 00 11***
13.5	6 - 12	50	***08.07 00 13***
16	10 - 14	50	***08.07 00 16***
21	13 - 18	50	***08.07 00 21***
29	18 - 25	25	***08.07 00 29***
36	22 - 32	1	***08.07 00 36***
42	32 - 38	1	***08.07 00 42***
48	37 - 44	1	***08.07 00 48***
Metric			
M 12 x 1.5	2 - 5,5	50	***08.07 01 12***
M 16 x 1.5	4,5 - 9	50	***08.07 01 16***
M 20 x 1.5	7 - 12,5	50	***08.07 01 20***
M 25 x 1.5	9 - 16,5	25	***08.07 01 25***
M 32 x 1.5	11 - 21	25	***08.07 01 32***
M 40 x 1.5	19 - 28	25	***08.07 01 40***

Designation:	MS blind plug
Material:	brass nickel-plated
Sealing insert:	-
External seal:	O ring, NBR
Ingress protection:	PG: IP 65 Metric: IP 68
Temperature range:	-30ºC to +100ºC

Type	Cable Ø	VPE	Order No.
PG			
7		100	***08.04 06 07***
9		100	***08.04 06 09***
11		100	***08.04 06 11***
13.5		100	***08.04 06 13***
16		100	***08.04 06 16***
21		100	***08.04 06 21***
29		50	***08.04 06 29***
36		25	***08.04 06 36***
42		25	***08.04 06 42***
Metric			
M 16 x 1.5		50	***08.09 04 16***
M 20 x 1.5		50	***08.09 04 20***
M 25 x 1.5		50	***08.09 04 25***
M 32 x 1.5		25	***08.09 04 32***
M 40 x 1.5		1	***08.09 04 40***
M 50 x 1.5		1	***08.09 04 50***
M 63 x 1.5		1	***08.09 04 63***

Designation:	Counter-nut brass
Material:	brass nickel-plated
Sealing insert:	-
External seal:	-
Ingress protection:	-
Temperature range:	-

Type	Cable Ø	VPE	Order No.
PG			
7		100	***08.04 09 07***
9		100	***08.04 09 09***
11		100	***08.04 09 11***
13.5		100	***08.04 09 13***
16		100	***08.04 09 16***
21		100	***08.04 09 21***
29		100	***08.04 09 29***
Metric			
M 16 x 1.5		50	***08.09 09 16***
M 20 x 1.5		50	***08.09 09 20***
M 25 x 1.5		50	***08.09 09 25***
M 32 x 1.5		25	***08.09 09 32***
M 40 x 1.5		1	***08.09 09 40***
M 50 x 1.5		1	***08.09 09 50***
M 63 x 1.5		1	***08.09 09 63***

«ЭйБиЭн»
Тел.\факс +375(17) 390-51-85 info@abn.by Тел. +375(44) 592-00-86
Тел.\факс +375(17) 390-51-86 www.abn.by

Designation:	Counter-nut brass EMC
Material:	brass nickel-plated
Sealing insert:	-
External seal:	-
Ingress protection:	-
Temperature range:	-

Type	Cable Ø	VPE	Order No.
PG			
7		100	***08.07 09 07***
9		100	***08.07 09 09***
11		100	***08.07 09 11***
13.5		100	***08.07 09 13***
16		100	***08.07 09 16***
21		100	***08.07 09 21***
29		100	***08.07 09 29***
36		100	***08.07 09 36***
42		100	***08.07 09 42***
48		100	***08.07 09 48***
Metric			
M 12 x 1.5		50	***08.07 08 12***
M 16 x 1.5		50	***08.07 08 16***
M 20 x 1.5		50	***08.07 08 20***
M 25 x 1.5		50	***08.07 08 25***
M 32 x 1.5		25	***08.07 08 32***
M 40 x 1.5		25	***08.07 08 40***

Designation:	Pressure balance element
Material:	polyamide
Sealing insert:	-
External seal:	-
Ingress protection:	IP 68 / IP 69K
Air flow rate:	0.8 l/min at 0.1 bar ΔP 7,6 l/min at 1.0 bar ΔP
Temperature range:	-40°C to +120°C

Type	Colour	VPE	Order No.
Metric			
M 12 x 1.5	black	5	***08.50 01 12***
M 12 x 1.5	grey	5	***08.50 02 12***

Designation:	Pressure balance element stainless steel
Material:	1.4301
Sealing insert:	-
External seal:	NBR
Ingress protection:	IP 66 / IP69K
Air flow rate:	0.4 l/min at 0.1 bar ΔP 5 l/min at 1.0 bar ΔP
Temperature range:	-40°C to 120°C

Type	VPE	Order No.
Metric		
M 12 x 1.5	1	***08.50 10 12***

«ЭйБиЭн»
Тел.\факс +375(17) 390-51-85 info@abn.by Тел. +375(44) 592-00-86
Тел.\факс +375(17) 390-51-86 www.abn.by

How to choose the right enclosure

Various criteria have to be taken into account when selecting a enclosure:
- place of installation (inside/outside, Ex area, saltwater area etc.)
- size (depending on the internal equipment)
- protective function (type of protection, EMC resistance, Ex)

The following lists help you selecting the right enclosure for your special application.

I. Enclosure material specifications

Aluminium enclosure
- light-weight, sturdy metal enclosure
- good chemical resistance (see table)
- can be used for a large temperature range
- EMC basic screening (full screening as an option)
- good machining possibilities
- Applications: suitable for inside and outside, when used outside in an aggressive or saltwater environment, special version or Ex versions available

Polyester enclosure
- plastic enclosure for adverse environments
- good chemical resistance (see table)
- can be used for a large temperature range
- good insulation properties
- V-0 execution (acc. to UL)
- Applications: suitable for inside and outside; industrial standard enclosure

Polycarbonate enclosure
- light-weight plastic enclosure
- good chemical resistance (see table)
- can be used in a large temperature range
- good insulation properties
- good machining possibilities
- transparent executions possible (lid)
- Applications: suitable for inside and outside

ABS enclosure
- light-weight plastic enclosure
- good chemical resistance (see table)
- can be used in standard temperature ranges

Polystyrene enclosure
- light-weight plastic enclosure
- good chemical resistance (see table)
- can be used in standard temperature ranges

II. Ingress protection

The ingress protection of ROSE enclosures is classified in accordance with the generally applicable directives meeting EN 60529 and IEC 144.
The ingress protection are identified by a code composed of two always identical letters IP and two numbers indicating the degree of protection.

Degrees of protection relating to contact and foreign bodies

First number	Denomination
0	No protection
1	Protection against large foreign bodies
2	Protection against medium-sized foreign bodies
3	Protection against small foreign bodies
4	Protection against grainy foreign bodies
5	Protection against dust deposits
6	Protection against the ingress of dust

Degrees of protection relating to water

Second number	Denomination
0	No protection
1	Protection against vertically dripping water
2	Protection against dripping water at an angle???
3	Protection against water spray
4	Protection against water splashes
5	Protection against water jet
6	Protection against flooding
7	Protection when dipped
8	Protection when immersed

Note: The ingress protection indicated for the enclosures refer to the unmachined enclosures in the delivered state. Aging and temperature fluctuations might lead to a reduction of the degree of protection.

«ЭйБиЭн»
Тел.\факс +375(17) 390-51-85 info@abn.by Тел. +375(44) 592-00-86
Тел.\факс +375(17) 390-51-86 www.abn.by

III. Chemical resistance

When assessing whether or not a enclosure is resistant to the influence of chemical substances, not only the enclosure material, but also the type of seals has to be taken into consideration.
The following tables only list the most important basic materials used for ROSE enclosures, and the most common chemical substances. These tables only contain information as to how far materials are typically resistant to such substances. Both the concentration and the ambient temperature must also be taken into account.
If several chemicals are encountered at the same time, we recommend to carry out an exact investigation to be able to correctly assess the chemical resistance of a material.

Chemical resistance of enclosure materials

Chemicals	Aluminium	ABS	Polycarbonate	Polyester	Polystyrene	Polyamide
Acetone	+	-	-	-	-	•
Formic acid	•	-	30 %	10 %	•	-
Ammonia	+	-	-	-	+	20 %
Petroleum	+	-	•	+	•	+
Benzene	+	-	-	+	-	-
Brake fluid	/	/	-	+	/	60°
Butane	+	/	+	/	-	+
Butanol	/	/	/	+	/	+
Calcium chloride	+	/	+	+	+	+
Chlorbenzene	+	-	-	+	-	•
Diesel oil	/	+	•	+	•	/
Acetic acid	+	10 %	• 10 %	40 %	+ max. 50 %	-
Formaldehyde	+	+	/	30 %	+ max. 40 %	+
Frigen 113	/	/	+	+	/	/
Fruit juice	/	/	+	+	/	+
Glycerine	+	+	•	+	+	+
Heating oil	+	•	•	+	•	+
Hydraulic oil	/	/	+	+	•	+
Lime potash	/	/	-	-	+ max. 50 %	-
Potassium chloride	•	/	+	+	+	+
Potassium hydroxide	-	+	/	-	+	/
Linseed oil	+	/	+	+	+	+
Methanol	+	/	-	-	+	•
Methylene chloride	+	/	-	-	-	-
Lactic acid	+	+	10 %	+	+ max. 80 %	10 %
Mineral oils	/	+	+	+	+	+
Engine oils	/	/	+	+	+	+
Sodium carbonate	•	/	+	+	+	+
Sodium chloride	•	/	+	+	+	10 %
Sodium hydroxide	+	+	/	-	/	/
Caustic soda	/	-	-	40 %	+ max. 50 %	10 %
Nitric acid	+	30 %	10 %	10 %	+ max. 25 %	-
Hydrochloric acid	/	10 %	• 20 %	+	+ max. 10 %	-
Lubricating oil	+	/	+	+	/	+
Carbon disulfide	+	/	-	-	-	•
Sulphuric acid	•	30 %	50 %	70 %	+ max. 50 %	-
Soapy lye	/	/	•	+	/	+
Detergent	/	/	+	/	/	/
Turpentine oil	/	/	/	+	-	+
Carbon tetrachloride	+	-	/	+	-	•
Toluene	+	-	-	+	-	+
Trichlorethylene	+	-	/	-	-	-
Water (distilled water, fresh water, tap water, saltwater)	/	+	+	+	+	+
Tartaric acid	/	/	10 %	+	+	+
Xylene	+	-	-	+	-	+
Zinc sulphate	•	/	+	+	+	/
Citric acid	+	10 %	10 %	+	+	10 %

Unless otherwise quoted, the investigation was conducted at ambient temperature. If several substances are encountered, the resistance factors could change. For this reason, we do not assume any liability for the above information.

Symbol definition

+ :	resistant to all concentrations	• :	conditional resistance
%:	resistant to a maximum concentration in %	- :	non resistance
C°:	resistant to maximum C°	/ :	no information

«ЭйБиЭн»
Тел.\факс +375(17) 390-51-85 info@abn.by Тел. +375(44) 592-00-86
Тел.\факс +375(17) 390-51-86 www.abn.by

Chemical resistance of housing seals and accessories

Chemicals	Chloroprene	EPDM	NBR	Pocan	Polyurethane	PVC	Silic.
Acetone	+	+	-	+	-	-	•
Formic acid	+	+	-	10 %	/	< 50 %	•
Ammonia	+	+	+	10 %	/	•	+
Petroleum	+	•	+	+	+	+	+
Benzene	-	-	-	+	+	-	-
Brake fluid	•	-	/	+	/	/	+
Butane	+	/	+	+	/	50 %	-
Butanol	+	/	-	+	/	•	-
Calcium chloride	/	/	/	10 %	/	+	/
Chlorbenzene	-	-	-	-	-	-	-
Diesel oil	•	•	/	+	+	•	•
Acetic acid	-	/	-	10 %	/	25 %	-
Formaldehyde	-	/	+	/	/	40 %	+
Frigen 113	+	/	+	+	/	/	/
Fruit juice	+	+	/	+	+	+	+
Glycerine	+	+	+	+	+	+	+
Heating oil	•	•	+	+	+	•	•
Hydraulic oil	+	/	/	+	/	/	•
Lime potash	+	/	/	10 %	/	+	/
Potassium chloride	+	+	+	10 %	+	+	+
Potassium hydroxide	+	+	+	-	-	/	•
Linseed oil	+	+	+	+	+	+	•
Methanol	+	/	•	+	/	/	+
Methylene chloride	-	/	-	-	-	-	-
Lactic acid	+	+	+	/	/	10 %	/
Mineral oils	•	•	+	+	+	+	+
Engine oils	•	•	+	+	+	/	+
Sodium carbonate	/	/	/	10 %	/	/	/
Sodium chloride	+	+	+	10 %	+	+	+
Sodium hydroxide	+	+	•	-	-	•	•
Caustic soda	50 %	/	-	/	/	60 %	-
Nitric acid	•	+	•	10 %	-	30 %	-
Hydrochloric acid	+	+	< 65 % •	10 %	-	30 %	/
Lubricating oil	•	•	+	+	+	+	+
Carbon disulphide	-	/	-	+	/	•	-
Sulphuric acid	50 %	/	25 %	10 %	/	80 %	25 %
Soapy lye	+	/	+	10 %	•	•	+
Detergent	+	•	/	+	•	/	+
Turpentine oil	-	/	+	+	/	+	-
Carbon tetrachloride	-	-	-	+	-	•	-
Toluene	-	-	-	•	-	-	-
Trichlorethylene	-	-	-	•	-	-	-
Water (dist. water, fresh water, tap water, saltwater)	+	+	80 C°	+	+	40 C°	+
Tartaric acid	+	+	+	/	+	10 %	+
Xylene	-	-	-	•	-	-	-
Zinc sulphate	+	+	+	/	/	40 %	+
Citric acid	+	+	+	10 %	/	10 %	+

Unless otherwise quoted, the investigation was conducted at ambient temperature. If several substances are encountered, the resistance factors could change. For this reason, we do not assume any liability for the above information.

Symbol definition

+ : resistant to all concentrations
%: resistant to maximum concentration in %
C°: resistant to maximum C°
• : conditional resistance
- : non resistant
/ : no information

«ЭйБиЭн»
Тел.\факс +375(17) 390-51-85 info@abn.by Тел. +375(44) 592-00-86
Тел.\факс +375(17) 390-51-86 www.abn.by

II. Temperature range

By definition, the temperature resistance refers to the maximum permanent temperature under which the dimensional stability and the type of protection remains guaranteed. Often, the permissible short term peak temperatures can be considerably higher.
The definition of the temperature resistance of process automation components refers to the maximum permanent temperature under the effect of which the perfect function of the factory installed (electronic) components and the type of protection remain guaranteed.
In addition, classifications apply to storage and transport. They are contained in the individual product descriptions.

IV. Corrosion resistance

For critical outside areas, we offer:
SWB version (saltwater resistant):
washed - chromated - powder coated
RAL 5009 as standard, other colours on request.
For application areas with extreme UV radiation we recommend coating with a special polyester powder.

SBG/SBGL version only for wet painting processes.
SBG = Washed - chromated - priming
SBGL = Washed - chromated - priming - painting
Stainless steel socket inserts available on request.

EMC in enclosure technology

General information

In electrical/electronic engineering, enclosures assume two tasks:
- protection of the installed components from mechanical hazards and adverse radiation from outside
- protection of the surroundings from occurring mechanical and electrical hazards and adverse interference radiation from the components installed

Especially the electromagnetic compatibility (EMC) has an increasing effect on the selection of enclosures because of the ongoing development of the electronic components and the increased equipment density on the PCB's - which increasingly generates "pollution" by electromagnetic interference radiation in the environment.

Legal regulations

Within the framework of harmonising the European standards, an EC guideline directive (05.89/336/EEC) was passed in May 1989, which took effect in the Federal Republic of Germany on the 9th Nov. 1992 in the EMC law (EMVG).
This law is applicable to all units which might cause electromagnetic interference or the operation of which could be impaired by such interference.
The EMC directive came into effect on 1.1.1996 EC-wide - from which date all new electrical and electronic units brought into circulation within the EC had to fulfil these regulations.
As an external sign that the EC relevant laws (EMC law and further design basics), these units have to show the CE symbol.

Requirements from the enclosure

Enclosures as such are not subjected to the EMC law, as by definition they are not electrical or electronic units.
However, enclosures are to a large extent responsible for the intensity of interference emission (receipt and transmission of interference waves) of a unit.
At this point, the choice of the enclosure material is also decisive for the screening effect which is composed of a reflection and an absorption damping of a enclosure.

Synthetic materials (plastics) alone have no filtering effect on interference radiation. A screening effect can be achieved by additional costly treatment (metal flashing or application of a conductive lacquer).

Metal enclosures , on the other hand, offer a highly effective basic protection against interference radiation. (Here an important factor is a large contact surface of the individual components of the enclosure (cover, enclosure shells).

To meet special protection requirements, the EMC compatibility can be increased by
- conductive seals,
- contact bare front surfaces as well as
- EMC compatible cable screw connections.

«ЭйБиЭн»
Тел.\факс +375(17) 390-51-85 info@abn.by Тел. +375(44) 592-00-86
Тел.\факс +375(17) 390-51-86 www.abn.by

812020 07/09 DC 2.000

ROSE Systemtechnik GmbH
Erbeweg 13 - 15
D-32457 Porta Westfalica
Postfach 1362
D-32439 Porta Westfalica

Fon +49 571 5041-0
Fax +49 571 5041-6
E-Mail rose@rose-pw.de
Web www.rose-pw.de

A Phoenix Mecano Company

«ЭйБиЭн»
Тел.\факс +375(17) 390-51-85 info@abn.by Тел. +375(44) 592-00-86
Тел.\факс +375(17) 390-51-86 www.abn.by