# Safety light Curtains

- Control unit Type 2
- Single beam Photoelectric Sensors Type 2 and Type 4
- Safety light Curtains Type 2
- Safety light Curtains Type 4

## Nominal sensing distance

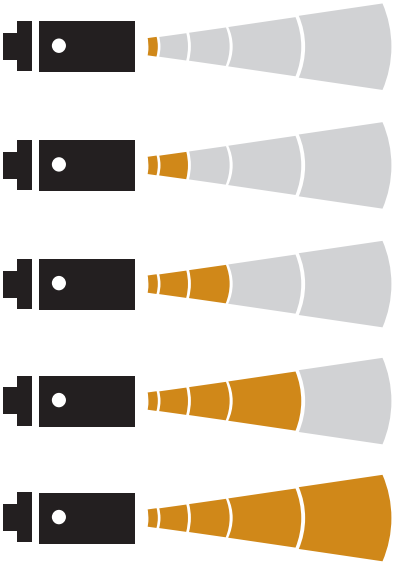

From 0 to 6 mm

From 0 to 12 mm

From 0 to 20 mm

From 0 to 30 mm

From 0 to 60 mm

## Type of detection

| | |
|---|---|
| | Finger protection |
| | Hand protection |
| | Presence control |
| | Body protection |

# Safety light Curtains
## Basic theory

## Safety light Curtains: characteristic elements

Light Curtains are electro sensitive devices using one or more light beams, emitted by an Emitter and received by a Receiver, to create an intangible controlled area. Fundamental characteristics are:

### Safety type

- Defines the self-monitoring and safety principles contained in the device
- It must be chosen as a function of the risk level characterising the machine

When the chosen safety device is a photo-electric barrier (AOPD Active Optoelectronic Protective Device), it shall necessary belong to TYPE 2 or TYPE 4 as established by the International Standard IEC 61496 1-2.

### Why “Type” and not “Category”?

When talking about light curtains and laser scanners, we normally refer to their “safety type”; while for all other safety devices the term of choice is “safety category”. This distinction is due to the International Standard IEC 61496, in which the term “type” is introduced to determine the safety level of optoelectronics protective equipment. In practice, “type” adds some optical requirements to the requirements which define categories for non-optical safety devices. Therefore, a Type 2 light curtain is a light curtain which complies with the requirements for category 2 safety electronics and furthermore whose beams have certain characteristics, among which a given aperture angle, immunity to light interference and so on. The same applies for Type 4 light curtains and Type 3 laser scanners.

### Resolution

Minimum size of an object that, placed into the controlled area, will obscure the controlled zone and hence stop the hazardous movement of the machine. Single beam light barriers: their resolution R is the same as the diameter of the lens.

**R = D**

Multibeam light curtains: their resolution R is the same as the sum of the lens diameter + the distance between two adjacent lenses.

**R = P + D**

| R = P + D | R = D |
|---|---|
| R : resolution | R : resolution |
| D : beam pitch | D : lens diameter |
| P : lenses | A : optical axis |

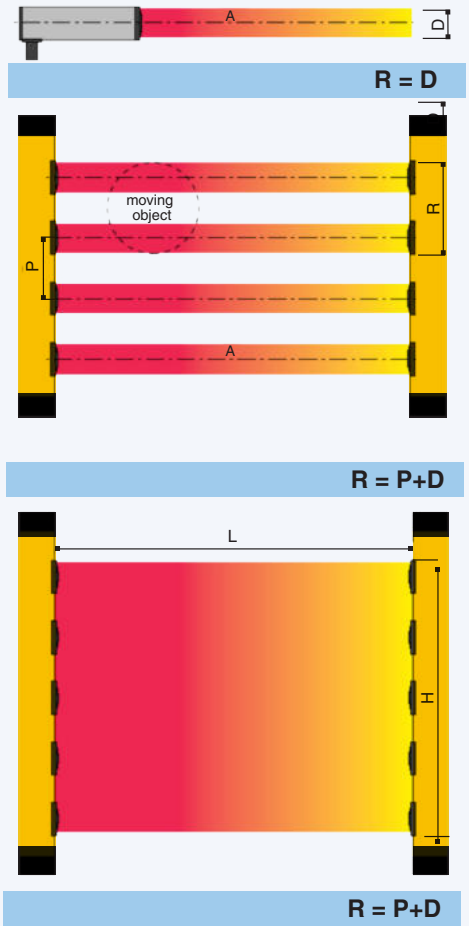


### Protected height

This is the height controlled by the light curtain. If it is positioned horizontally, this value shows the depth of the protected zone.

| | |
|---|---|
| L : | protected area lengh |
| H : | protected area height |

### Range

This is the maximum working distance that may exist between the Emitter and the Receiver. When deflection mirrors are used, it is necessary to take into account the attenuation factor introduced by each of them, which it is about 15%.

### Response Time

This is the time it takes for the light curtain to transmit the alarm signal from the time the protected zone is interrupted.

## Advantages of light Curtains

- Effective protection in the event of fatigue or distraction of the operator.
- Increase in the productive capacity of the machine as the light curtain does not require the manual handling of physical guards or waiting for them to open.
- Faster machine loading/unloading operations.
- Reduced times of approach to the working areas.
- Elimination of the risk of tampering since any irregular intervention on the light curtain stops the machine.
- Simple and quick installation, with greater flexibility of adjustment on the machine, even in the case of subsequent repositioning.
- Possibility to build up large sized protections, either linear or along a perimeter, on several sides, at greatly reduced costs.
- Facilitated and fast maintenance of the machine, as there is no need to remove physical guards, such as grids, gates, etc.
- Improved appearance and ergonomic effectiveness of the machine.

## Condition of use

For the photoelectric safety protections to be effective, it is necessary to verify that:

- It must be possible to electrically interface them to the control unit of the machine.
- The time taken to reach the hazardous point must be greater than the time necessary to stop the hazardous movement.
- The machine must not create secondary dangers due to the projection or fall from above of materials. If this danger exists, additional protections of a mechanical nature have to be provided.
- The minimum size of the object to be detected must be equal to or greater than the chosen light curtain resolution.

## Selection criteria of a safety light curtain

- Definition of the zone to be protected.
- Definition of the parts of the body to be detected:
  - fingers or hands;
  - approaching body of a person;
  - presence of a person in a hazardous area.
- Definition of the safety distance between the light curtain and the hazardous point.
- Definition of the safety category Level/Type to be adopted according to ISO 13849-1, IEC 62061, IEC 61496.

### Definition of the zone to be protected

- Take into account the configuration of the zone:
- shape and dimensions: width and height of the access area;
- positions of hazardous parts;
- possible access points.

The light curtain must be positioned so as to prevent the access to the dangerous area from above, from below, and from the sides without having.

intercepted the field protected by the light curtain.

It is possible to install one or more deflection mirrors in order to protect areas with access from several sides. This results in a considerable reduction in costs, as this solution eliminates the need of installing many separate light curtains.

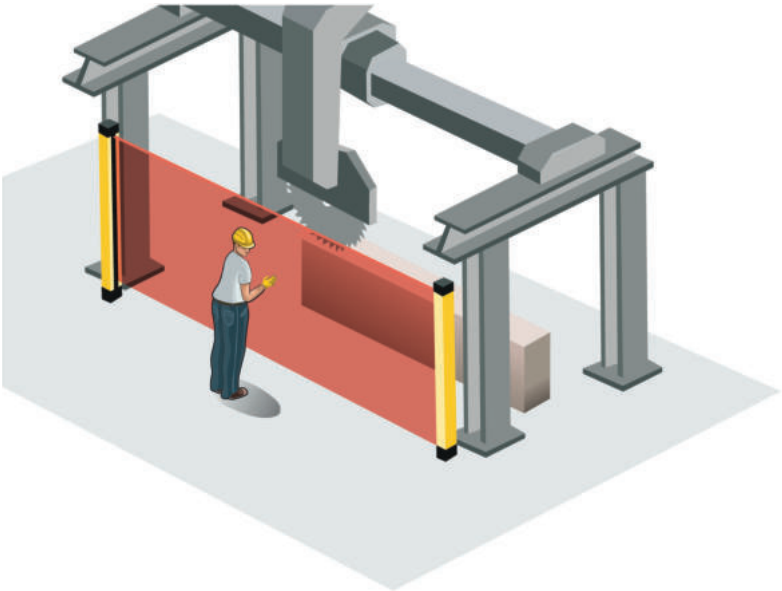



ЭйБиЭн www.abn.by

## Definition of type of detection

| | detection | characteristics | advantage |
|---|---|---|---|
| | finger or hand | Detection necessary when the operator must work close to the danger.<br><br>Barrier resolution must be between 14 mm and 40 mm. | Possibility to lower the dimensions by reducing at the top the space between the protection and the dangerous zone.<br><br>Short time for machine charging and discharging.<br><br>Less operator fatigue, more productivity. |
| | body (use as trip device) | Ideal detection for access control and protections of several sides, also for long scanning distances.<br><br>The barrier must be placed at least at 850 mm from the danger.<br><br>Barrier normally composed by 2, 3, 4 beams. | Protection costs reduced by the restricted number of beams.<br><br>Possibility to protect zones with big dimensions by using deflection mirrors.<br><br>see note below |
| | presence in a dangerous zone | Detection realized by positioning the light curtains horizontally to control continuously the presence of an object in a definite zone.<br><br>The light curtains resolution depends on the height of the detection plane, anyway it cannot be higher than 116 mm. | Possibility to control zones not visible from where the machine's push button controls are located. |

### Note

Accidental start-up of the machine shall not be possible when anyone crosses the sensitive area and stays undetected in the dangerous area.

**Suitable ways of eliminating this type of risk include the following:**

- Use of start / restart-interlock function positioning the command so that the dangerous area is in full view and so that the command cannot be reached by anyone from inside the dangerous area. The Restart command has to be safe in compliance with IEC 61496-1
- Use of additional presence sensing detectors for the detection of the operator inside dangerous area
- Use of obstacles preventing the operator from remaining undetected in the space between the sensing zone of the protective device and the dangerous area.

## Determination of the safety distance

The effectiveness of the protection depends greatly on the correct positioning of the light Curtain with respect to the danger. The light Curtain must be located at a distance greater than or equal to the minimum safety distance S, so that reaching the dangerous point will be possible only when the dangerous action of the machine has been stopped.

The light Curtain must be positioned so that:

- It is impossible to reach the dangerous point without going through the zone controlled by the light curtain
- A person cannot be present in the dangerous zone without his/her presence being detected. To this end, it might be necessary to resort to additional safety devices (i.e..: photoelectric light curtains arranged horizontally).

European Standard EN ISO 13855 provides the elements for the determination of the safety distance.
If the machine in object is governed by a specific C type Standard, it shall be taken into two account.

If the distance S determined in this manner is too big, it is necessary:

- a) to reduce the total stopping time of the machine,
- b) to improve the detection capability (resolution) of the light curtain.

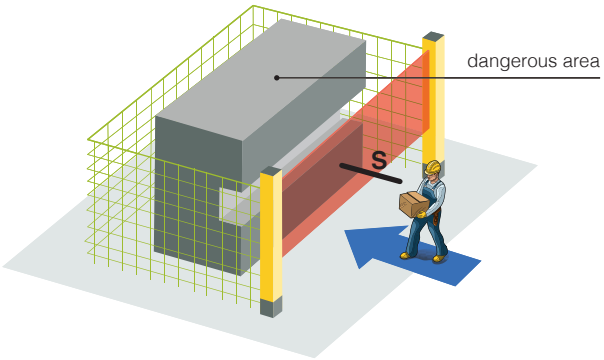


One-side protection

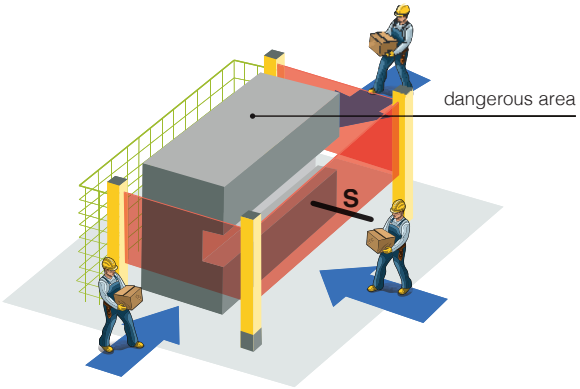


Three-side protection using deflection mirrors

## General formula for the determination of the minimum safety distance

| S = K x T + C | |
|---|---|
| S | minimum safety distance between the protection and hazardous point, expressed in mm |
| K | speed of approach of the body or parts of the body, expressed in mm / sec |
| T | total stopping time of the machine, consisting of:<br>**t1** reaction time of the protective device in seconds<br>**t2** reaction time of the machine in seconds, until it stops the hazardous action. |
| C | additional distance in mm |

**C takes into account:**
Possible intrusion of parts of the body in the sensitive area before they are detected. For example:

- C = 8 x (d-14) if D (light Curtain resolution) ≤ 40 mm.
- C = 850 if D (light curtain resolution) > 40 mm and for 2, 3, 4 beams Curtains.
- C = 1,200 - (0,4 x H) for horizontal light Curtains.

The dangerous point can be reached by leaning over the upper edge of the sensitive area of a vertical light Curtain.
In this case C, called “CRO” is obtained from the following Table 2 of EN ISO 13855 / EN 999.


ЭйБиЭн www.abn.by

| height of Hazard zone “a” (mm) | height “b” of upper edge of area protected by photoelectric Curtain (mm) | | | | | | | | | | | |
|---|---|---|---|---|---|---|---|---|---|---|---|---|
| | 900 | 1,000 | 1,100 | 1,200 | 1,300 | 1,400 | 1,600 | 1,800 | 2,000 | 2,200 | 2,400 | 2,600 |
| | alternative distance CR0 | | | | | | | | | | | |
| 2,600 | 0 | | | | | | | | | | | |
| 2,500 | 400 | | 350 | 300 | | | | | 250 | 150 | 100 | - |
| 2,400 | 550 | | | 500 | 450 | | 400 | | 300 | 250 | 100 | - |
| 2,200 | 510 | 750 | | 700 | 650 | | 600 | 550 | 400 | 250 | - | - |
| 2,000 | 950 | | 850 | | 800 | 750 | 700 | 550 | 400 | - | - | - |
| 1,800 | 1,100 | | 950 | | 850 | 800 | 750 | 550 | - | - | - | - |
| 1,600 | 1,150 | | 1,100 | | 900 | 800 | 750 | 450 | - | - | - | - |
| 1,400 | 1,200 | | 1,100 | 1,000 | 900 | 850 | 650 | - | - | - | - | - |
| 1,200 | 1,200 | | 1,100 | 1,000 | 850 | 800 | - | - | - | - | - | - |
| 1,000 | 1,200 | 1,150 | 1,050 | 960 | 750 | 700 | - | - | - | - | - | - |
| 800 | 1,150 | 1,050 | 950 | 800 | 500 | 450 | - | - | - | - | - | - |
| 600 | 1,050 | 950 | 750 | 550 | - | - | - | - | - | - | - | - |
| 400 | 900 | 700 | - | - | - | - | - | - | - | - | - | - |
| 200 | 600 | - | - | - | - | - | - | - | - | - | - | - |
| 0 | - | - | - | - | - | - | - | - | - | - | - | - |

(Tab.2 ISO 13855/EN 999)

- Interpolation is not allowed.
- If distances a, b or CRO fall between values listed in the table, use the higher.
- CRO (reaching over) calculated using Table 2 of EN ISO 13855 / EN 999 must be compared to C as conventionally calculate (see paragraph 1). Always select the higher value.

For combined mechanical and electrosensitive protections (as shown), where it would be possible to lean against the mechanical protection and bypass the light curtain, for the calculation of the parameter C should use the Table 1 (for low risk applications) or the Table 2 (for high-risk applications) of ISO 13857:2007 (formerly EN 294) in place of the table on the previous page. In this catalog the two tables of ISO 13857:2007 (formerly EN 294). Safety distances to prevent danger zones being reached by upper and lower limbs - are not mentioned.

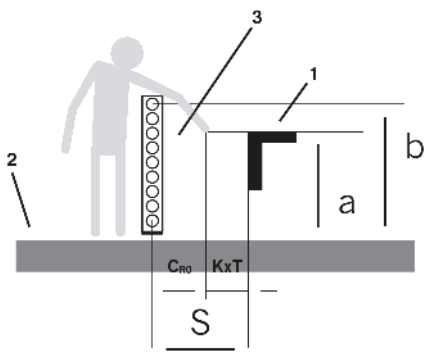


**1** Dangerous area
**2** Reference plane
**3** Light Curtain

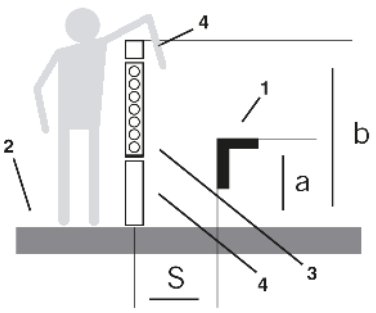


**1** Dangerous area
**2** Reference plane
**3** Light Curtain
**4** Mechanical protection

## Direction of approach perpendicular to the protected plane with α = 90° (± 5°)

**Light Curtains with resolution for the detection of hands and fingers. Light Curtains resolution (d) ≤ 40 mm** — **D ≤ 40**

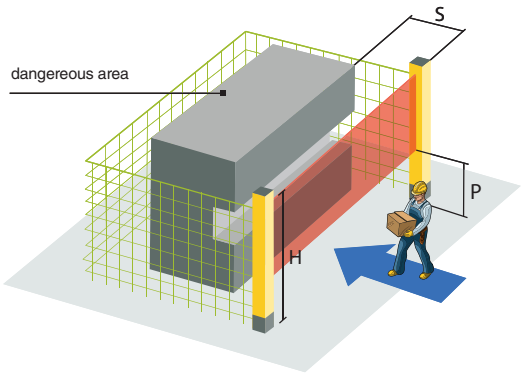


**S = 2,000 xT + 8x (d-14)**

**if the formula as a result:**

**S > 500**

**you can use K = 1,600**

**S = 1,600 xT + 8x (d-14)**

- The distance S must not be lower than 100 mm
- If the distance S is greater than 500 mm it is possible to re-calculate the distance using K =1,600
- In these circumstances, the distance must in no case be lower than 500 mm

**Light curtains with a resolution for detection of arms and legs. 40 mm < Light curtains resolution (d) ≤70 mm** — **40 < D ≤ 70**

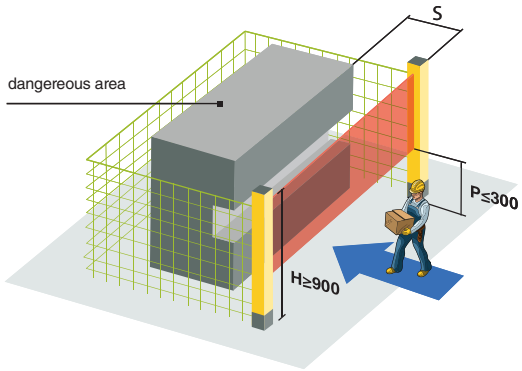


**S= 1,600 xT + 850**

- The height of the lowest beam must be equal to or lower than 300 mm
- The height of the uppest beam must be equal to or higher than 900 mm

**Light grids for body detection through access control. Light Curtains resolution (d) >70 mm** — **D > 70**

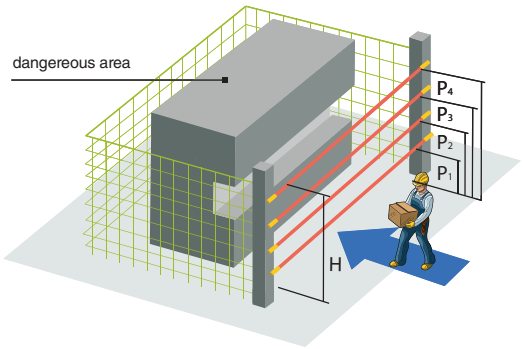


**S= 1,600 xT + 850**

- Number and height of the beams
- N. Recommended height

2,400 - 900 mm
3,300 - 700 - 1,100 mm
4,300 - 600 - 900 - 1,200 mm



ЭйБиЭн www.abn.by

## Direction of approach parallel to the protected plane with α = 0° (± 5°)

Horizontal light curtains for presence control in a dangerous area

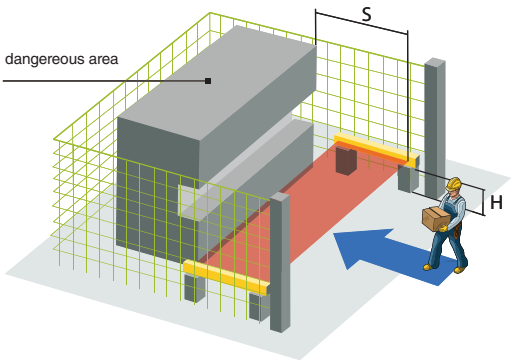


**S=1,600 xT + (1,200 - 0.4 xH)**

- C = 1,200 - (0.4 x H) must be equal to or greater than 850 mm.
- The maximum height allowed is: Hmax = 1,000 mm.
- The height H depends on the resolution d of the light curtains and is determined through the following formula: H = 15 x (d - 50).
- This formula can also be used to determine the maximum resolution that can be used at the different heights d = H / 15 + 50
- For example, the maximum resolution limits will be:
for H = 1,000 mm d = 116 mm
for H = 0 mm d = 50 mm
- If H is greater than 300 mm, at the stage of risk assessment it becomes necessary to take into consideration the possibility of access from beneath the beams.

## Direction of approach angled to the protected plane with 5°< α < 85°

Slanted light Curtains to detect hands and arms and for presence control in the dangerous area.

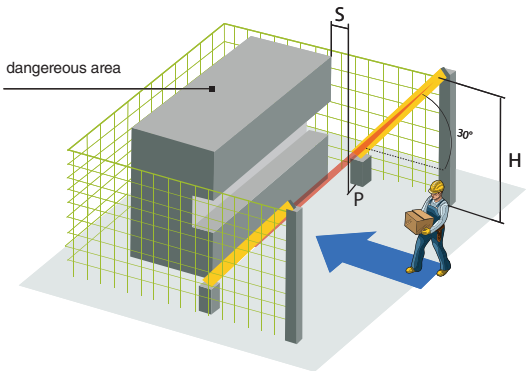


**With angle a > 30° refer to the case of approach perpendicular to the protected plane. (Previous case)**

**With angle a < 30° refer to the case of approach parallel to the protected plane (cases of previous page)**

With α > 30°:
- The distance S refers to the beam farthest away from the hazardous point.
- The height of the beam farthest away from the hazardous point must not be greater than 1,000 mm.
- For the determination of height H or resolution d apply the following formulas to the lowermost beam:
H = 15 x (d - 50)
d = H / 15 + 50

## Muting function

The Muting function is the provisional and automatic cut-out of the light curtain protective function in relation to the machine cycle. Muting can only occur in a safety condition. Two types of applications are envisaged:

### 1. Enabling personnel access inside dangerous area during the non-dangerous part of machine cycle

**Positioning or removal of workpiece**

Depending on the position of the tool, which is the most dangerous part, one of the two curtains (the one facing the tool working area) is active whereas the other is in Muting mode to enable the operator to load/unload the workpiece. Muting mode of the light curtains is subsequently reversed when the tool works on the opposite side of the machine.

### 2. Enabling access to material and preventing access to personnel

**Pallet exit from dangerous area**

The safety light curtain incorporates Muting sensors able to discriminate between personnel and materials. Only the material is authorized to pass through the monitored area.

**The essential requirements regarding the Muting Function are described by the followings Standards:**
**IEC TS 62046** "application of the protective equipment to detect the presence of persons"
**EN 415-4** "Safety of the Machinery - automatic palletizing systems"
**IEC 61496-1** "Electro-Sensitive Protective Equipment"

### General Requirements

- Muting is a temporary suspension of the safety–related function and it must be activated and de-activated automatically.
- The safety integrity level of the circuit implementing the Muting function shall be equal to that of the safety function temporarily suspended, so that the protection performance of the entire system is not adversely affected.
- Muting should be activated and de-activated only by means of two or more separate hardwired signals triggered by a correct time or space sequence.
- It shall not be possible to trigger Muting while the ESPE outputs are in the off state.
- It shall not be possible to initiate Muting by turning the device off and then on again.
- Muting shall be only activated in an appropriate point of the machine cycle, i.e. only when there is no risk for the operator.
- Muting sensors shall be mechanically protected to prevent mismatch in case of impact.

### Muting: palletizers and materials handling systems

**Requirements for the monitoring of the openings**

- Monitor the load, not the pallet, otherwise the operator might go into the hazardous zone being dragged by the pallet.
- Muting time must be restricted to the actual time taken by the material to pass through the opening.
- Muting must be time-restricted.
- Sensor mismatch with effect similar to their actuation shall not allow a condition of permanent Muting.
- The configuration and positioning of the Muting sensors shall ensure reliable differentiation between personnel and material.
- The layout of the opening, the positioning of the Muting sensors and the additional side protections shall prevent personnel access to the dangerousarea for all the time the Muting function is activated and throughout the time the pallet crosses the opening.

Therefore it is necessary to realise a safety system able to distinguish between:

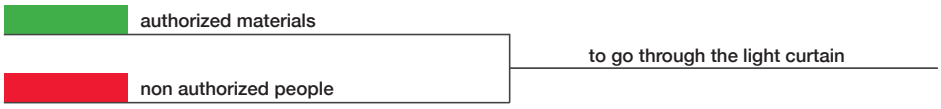


The Muting function can be present on both Type 2 and Type 4 Safety light Curtains.


ЭйБиЭн www.abn.by

## Common solutions for Muting sensor positioning

**Muting with 2 crossed-beam sensors**
**Configuration type T with timing monitoring and two-way pallet operation:**

- The point of intersection of the two beams shall lie in the segregated dangerous area beyond the light curtain.
- A fail safe timer shall be provided to restrict Muting to the time needed for the material to cross the opening.
- The Muting function shall be activated only if the Muting sensors are contemporaneously intercepted: (t2(S2) – t1(S1) = 4 seconds max.).
- The two beams shall be continuously interrupted by the pallet throughout the transit through the sensors.
- A matt cylindrical object D=500 mm (simulating the size of a human body) shall not trigger the Muting function.

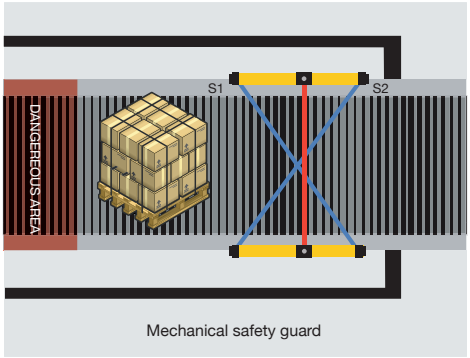


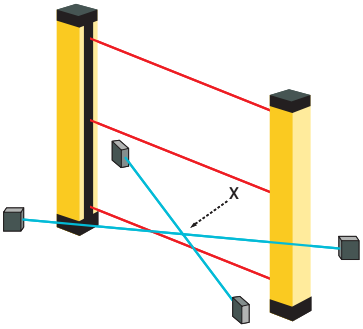


Muting sensor beam intersection shall be positioned the higher up or equal than level of the lower light curtain beam to avoid possible tampering or accidental triggering of Muting.

**Muting with 4 parallel-beam sensors**
**Configuration type T with timing and/or sequence monitoring**
**Two-way pallet operation:**

- The 4 Muting sensors shall be all actuated together for a brief moment (sequential actuation and de-activation of the 4 sensors).
- The distance between sensors and the sensing field of the light curtain shall be:

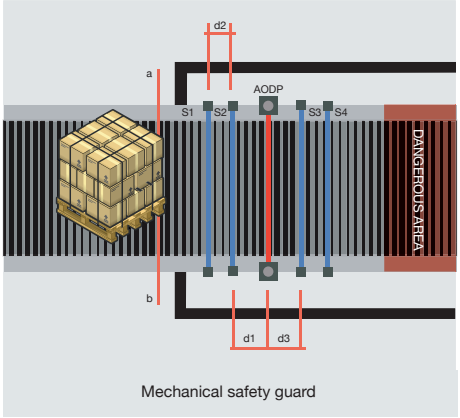


**dl and d3 < 200 mm**

To prevent undetected personnel access by preceding or following immediately after the pallet during Muting.

**d2 > 250 mm**

To prevent personnel limb, garment, etc. from enabling Muting by triggering two sensors simultaneously.

**Muting with 2 crossed-beam or parallel-beam sensors**
**Configuration type L with timing monitoring and oneway only (exit from dangerous area) pallet operation:**

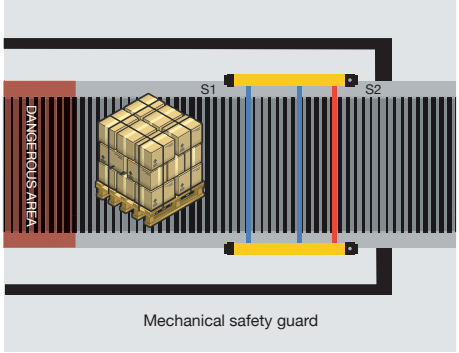


- Muting sensors shall be positioned beyond the light curtain in the dangerous area.
- Muting shall be disabled as soon as the light curtain is cleared and not later than 4 seconds max. from the instant the first of the two Muting sensor is cleared. The timer monitoring the 4 seconds shall be a safety-related item.

**Possibe functions associated with Muting are:**

- **Muting sequence:** in case Muting inputs are not activated within the right temporal sequence Muting function is excluded.
- **Maximum Muting Time-Out:** if barriers remains in Muting condition longer than the prefixed time muting function is automatically stopped.
- **Override function:** if a wrong muting sequence occures or any material remains blocked inside protected area it's not possible to restart the machine. Override function allows emergency forced temporary restart of the machine by activiating a dedicate signal on the barrier. That allows to free the control area from the obstacle.

## Blanking function

**Blanking** is an auxiliary function of safety light curtains for which the introduction of an opaque object inside parts of the light curtain's protection field is allowed without causing the stoppage of the machine. Blanking is only possible in the presence of determined safety conditions and in accordance with a configurable operating logic. The blanking function is therefore particularly useful when the light curtain's protection field must be inevitably intercepted by the material being worked or by a fixed or mobile part of the machine. In practice, it is possible to keep the light curtain's safety outputs in an ON condition, and the machine working, even if a pre-determined number of beams within the protection fields are being intercepted.

**Fixed Blanking** allows a fixed portion of the protection field (i. e. a fixed set of beams) to be occupied, while all the other beams operate normally.

**Floating Blanking allows the object** to move freely inside the light curtain's protection field occupying a given number of beams, at the condition that the occupied beams are adjacent and that their number is not higher than the configured one.

**Floating Blanking** with compulsory object presence makes the light curtain work in a reverse way within the blanked portion of the protection field. That is, the blanked beams must be occupied during blanking and therefore the object has to be inside the protection field for the light curtain to remain in the ON state. In this case too the object can move freely within the protection field if the above conditions are respected.

Requirements for the blanking function can be found in the Technical Specification **IEC/TS 62046** describing additional means that may be required to prevent a person from reaching into the hazard through the blanked areas of the detection zone.

**Warning**

- The use of the blanking function can be allowed depending on the characteristics of the application to be protected. Based on the risk analysis of your application, check whether the use of the blanking function is allowed for that particular application and with what features.
- M.D. does not assume responsibility for the improper use of the blanking function nor for the possible damages deriving from it.
- The use of the blanking function may need a recalculation of the safety distance due to the modified detection capability.

## Minimum distance from reflecting surfaces

The optical beams of the projector, having a beam angle that is not null, can partly be diverted by reflective surfaces located near to the safety light curtain. This may mean that a break in the direct path of the optical beam is not detected, which is why all reflective surfaces and reflective objects (in any position they may have with respect to the controlled area, above, under, inside or outside) must respect a minimum distance from the direct path of the beams of the Safety light Curtain.

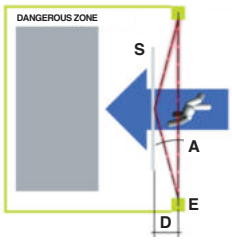


**E** Emitter
**R** Receiver
**D** minimum distance
**S** reflective surface
**A** aperture angle
**P** operatig distance

Safety light Curtains respect the maximum beam angle defined by IEC / EN 61496-2.
The safety distance D is calculated considering the entire beam angle and the safety light curtain reciprocally orientated towards the reflective surface by an angle a, in this way we consider the case of alignment at the limit of reciprocal visibility between the emitter and receiver, but which is more dangerous due to the effects of the reflection.

For ranges less than 3 m the value calculated at 3 m applies:

**D = tan(A) * P/2**

For P ≥ 3 m the safety distance D to take is calculated as follows:

**Type 2:** A = 10° ⟶ tan(A) = 0.1763

**Type 4**: A = 5° ⟶ tan(A )= 0.0875


ЭйБиЭн www.abn.by

The following chart shows minimum distance from reflective surface for Type 2 and Type 4 safety light curtains with a maximum operating distance of 10 m.

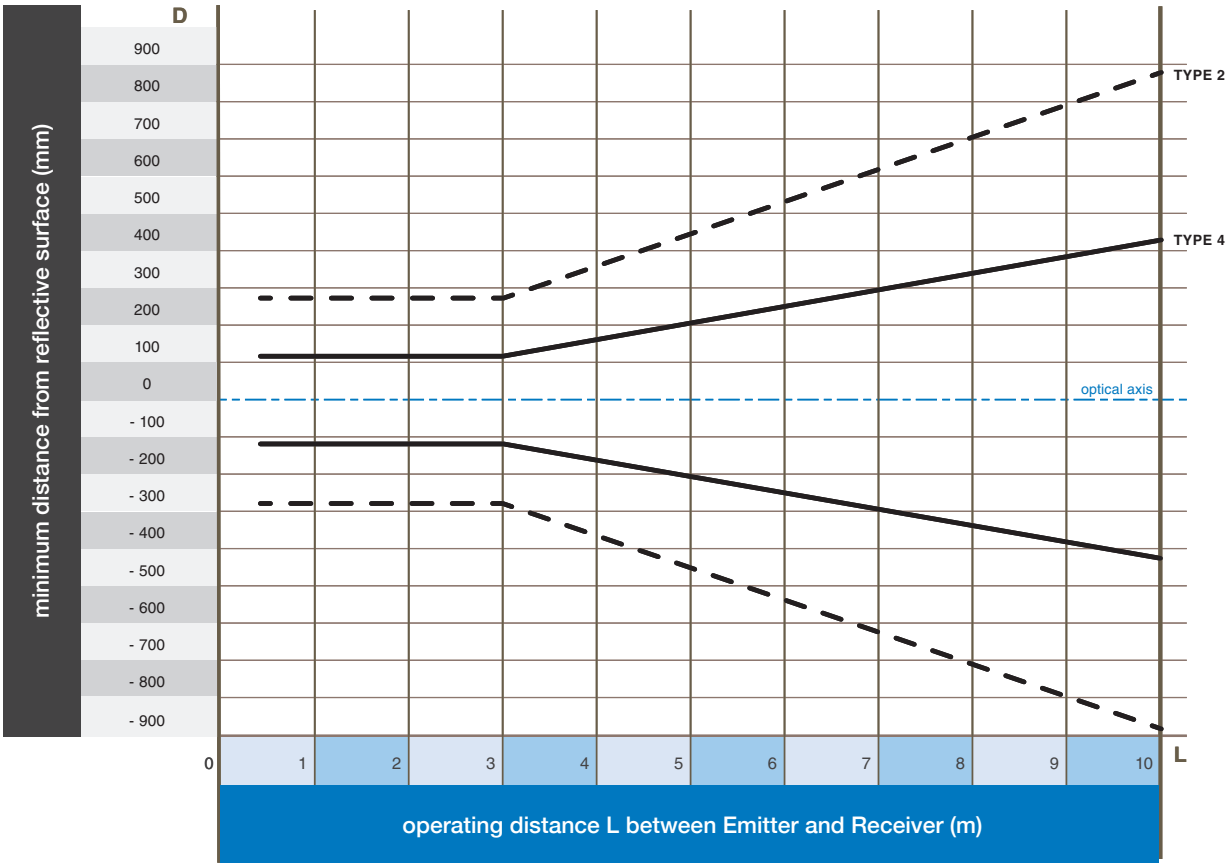


## Instructions for component installation

The angular opening of a safety light curtain is extremely narrow (±5° for Type 2 and ±2,5° for Type 4), therefore the alignment procedure must be carried out with great care:

• The brackets must make it possible to position both the emitter and the receiver, and at the same time they must be strong enough to maintain the alignment under working conditions. Furthermore, remember that eventual vibrations or shock could misalign the Safety light Curtain.

• If beam deflecting mirrors are used, it is necessary to keep in mind that the alignment procedure will be more difficult. As a matter of fact, considering that each mirror will involve a capacity reduction of about 15% (depending on the quality of the mirror) and that the mirror brackets may not be particularly steady, the system will be easily misaligned (for example when trying to clean the mirror).

• The presence of shiny or reflective surfaces can cause the safety light curtain to be ineffective. It is therefore necessary to position the safety light curtain at a suitable distance from any reflective surfaces.

• Any control unit which does not provide at least an IP54 protection degree must be installed within a switchboard, in order to guarantee this minimum protection.

• The safety light curtain must be positioned so as to avoid anyone accidentally leap frogging it. When determining the minimum distance at which the safety light curtain must be positioned in the danger area, it is necessary to take into account.

the safety light curtain's response time and the machine's shutdown time, as previously described.

• The start-up or restart-up devices must be positioned so as to prevent the function in question from being activated by an operator within the protected area.

## Integration of the ESPE

As the ESPE will be integrated in the machine safety-related control system, the choice of its safety level will depend on the result of risk analysis and, consequently, on parameters such as PL, SIL or Category resulting from this analysis. Product Standards (Type C) usually recommend the most suitable ESPE type for each safety-related function involved. If type C Standards are not available, adopt the recommendations of ISO 13849-1 and IEC 62061. Also consider that the overall safety integrity of the serial connection: input – control unit – actuators, shall necessarily be equal to or lower than that of the weaker device.

### Rules for correct interconnection of protection devices to machine control system

The interconnections between safety outputs of ESPE (OSSD) and the machine primary control elements, the positioning and selection of reset push buttons shall not reduce or eliminate the extent of safety integrity assigned to the safety-related machine control system.

Figure A shows the most common example, i.e. where the machine control and monitoring system (e.g. the PLC) has no safety-related function. In this case, the safety-related control system monitoring the protective devices connected to it must operate autonomously and must be inserted between the machine control system and the machine primary control elements.

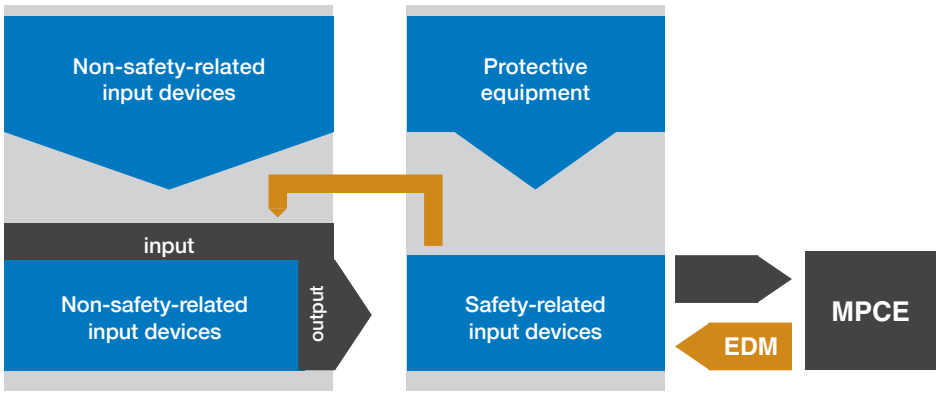


Figure A

**MPCE** = Machine Primary Control Element

If the machine is equipped with an integrated safety-related control and management system (safety-related PLC), see figure B, machine operational functions and safety-related functions should be governed through the centralized safety-related system.

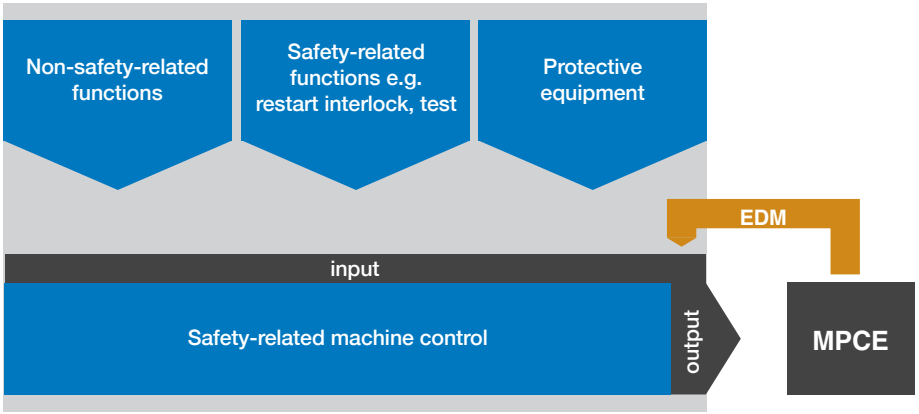


Figure B



ЭйБиЭн www.abn.by

## Glossary

| symbol | detection | characteristics |
|---|---|---|
| | Warning to avoid danger! | A warning indicates real or potential hazards. Its task is to indicate procedures and behaviour that can avoid accidents. Read and follow these instructions carefully. |
| | Indication | Indications that can help achieve better performance. |
| | Emitter symbol | This symbol identifies devices that have the function of a projector. |
| | Receiver symbol | This symbol identifies devices that have the function of a receiver. |
| | Finger protection | This symbol marks devices designed to detect fingers entering a protected area. It refers to safety light curtains with a resolution of 14 mm, this value enables using the minimum safety distance and therefore reducing the loading and unloading times to a minimum and the least fatigue for the operator. |
| | Hand protection | This symbol marks devices designed to detect a hand entering a protected area. It refers to safety light curtains with a resolution less than or equal to 40mm; these resolutions allow safety distances compatible with short loading and unloading times and a low level of operator fatigue. |
| | Presence control | This symbol marks devices designed to detect limbs entering a protected area or detect human presence in a protected area. For presence detection, with light curtains in a horizontal position, resolutions of between 50 and 116mm are to be used, the height off the ground is calculated in relation to these values. |
| | Body protection | This symbol marks devices designed to detect a body entering a protected area. It refers to multi-beam safety light grids with 2, 3 or 4 beams. These light curtains are usually cost-effective and feature a long range, they enable creating protection for extensive areas and on more than one side, using diverter mirrors. |

## notes



ЭйБиЭн www.abn.by

# SBCR03 series
## Control unit
## Type 2



## features

- Up to 6 sets of safety photocells M18 (SH4-IA) or M30 (TH6-IA) interconnectable
- DIN RAIL Mounting
- Body protection and access control
- Cat. 2 according to EN 61496-1
- Cat. 2 / PL c according to EN ISO 13849-1; SIL CL 1 acording to EN 62061 / IEC 61508
- Models with single/double channel Muting and Override functions
- Response time less than 5 ms
- 2 OSSD outputs

## web contents

- Application notes
- Photos
- Catalogue / Manuals

## code description

SBCR03 / S - A 0

| | | |
|---|---|---|
| series | SBCR03 | Safety control unit for safety photocells |
| power supply | S | 24 Vcc operating voltage |
| inputs | A | Suitable for safety photocells |
| type | 0 | Standard model |
| | M | Muting/Override model |

## connectable devices

| series | photocell | operating distance |
|---|---|---|
| SH4 - IA | M18 | until 10 m |
| TH6 - IA | M30 | until 60 m |

## technical specification

| | SBCR03/S-A0 | SBCR03/S-AM |
|---|---|---|
| operating voltage | 24 Vdc | |
| tolerance on operating voltage | - 30...+ 20 % | |
| voltage ripple | 5 Vpp | |
| absorbed current | 100 mA | |
| available functions | Safety function | |
| | START / RESTART / INTERLOCK ≤125 ms | |
| | EDM (300 ms relay switching time monitoring) | |
| | - | muting |
| | - | double muting |
| | - | override |
| muting sequence | - | 3 s (selectable) |
| muting Time-Out | - | 3 min (selectable) |
| muting sensors type | - | 4 x PNP, NO |
| muting lamp output | - | 2 lamps 1 to 10 W, from 1 to 10 W, 24 Vcc |
| status lamp output | - | from 1 to 10 W, 24 Vdc |
| output voltage drop | 2.5 V @ 500 mA | |
| response time | ≤ 5 ms | |
| recovery time | ≥ 100 ms | |
| IP mechanical protection | to be mounted inside a cabin with IP54 minimum | |
| operating temperature | -20°...+60°C | |
| storage temperature | -25°...+75°C | |
| housing material | ABS UL VO | |
| weight | 700 g | |

## safety parameters

| | Category 2 safety control unit |
|---|---|
| safety integrity level | SIL3 (IEC 61508), SIL CL 3 (EN 62061) (1) |
| Type | 4 (EN ISO 13849) (1) |
| performance level | PL e (EN ISO 13849) (1) |
| maximum frequency of request (3) | 60/min (EN ISO 13849) |
| $PFH_d$ (4) | $8.1 \times 10^{-6}$ |
| TM (life time) | 20 years |



ЭйБиЭн www.abn.by

## electric diagrams of the connections

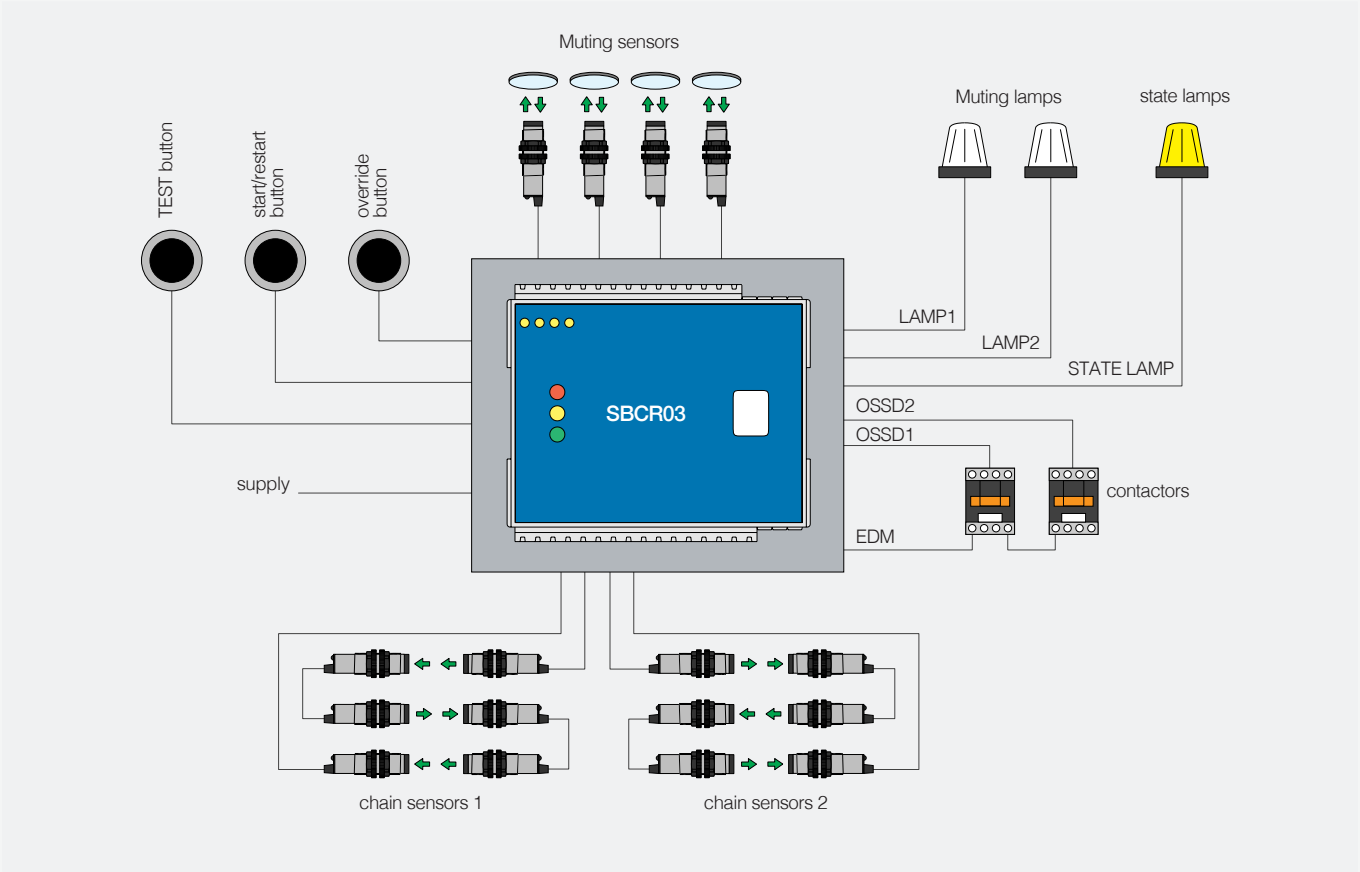


## Muting conditions

| n° of Muting sensors | Muting signals combinations |
|---|---|
| 2 | M1 & M2 |
| 3 | M3 followed by M1& M2 (direction recognition) |
| 2+2 | M1 & M2 and/or M3 & M4<br>M1 M2 muting is indipendent from M3 M4 |

## Muting conditions and Muting sequence control

| n° of Muting sensors | Muting signals combinations |
|---|---|
| 2 | M1 & M2 must be active within 3 s |
| 3 | M1 & M2 must be active within 3 s (with M3 is active) |
| 2+2 | M1 & M2 and / or M3 & M4 must be active within 3 s<br>Muting sequence of M1 M2 is indipendent from Muting sequence of M3 M4 |

# dimensions (mm)

## SBCR03/S-A0

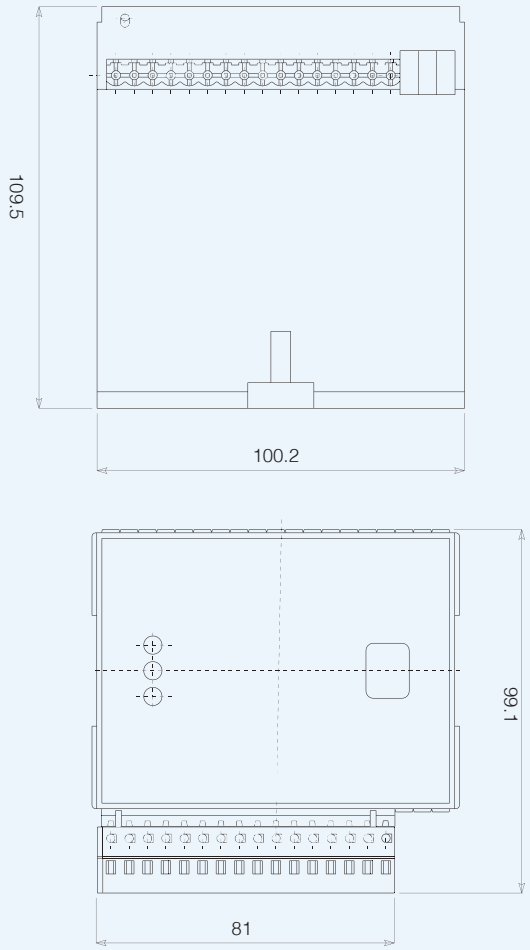


## SBCR03/S-AM

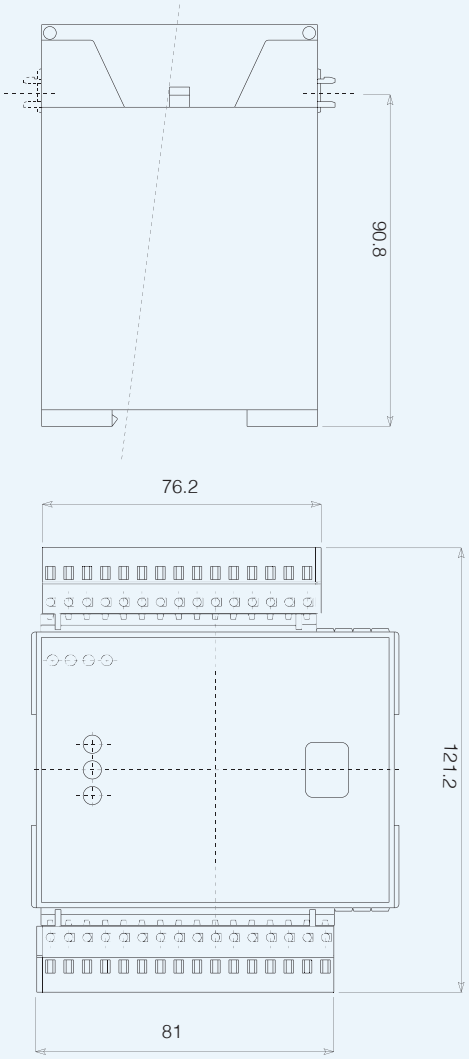




ЭйБиЭн www.abn.by

# SH-IA/IC e TH-IA/IC series

## Photocells

Type 2 and Type 4

## features

- M18 Models 10 m (axial optic) and 5 m (radial optic) operating distance
- M30 models 60 m operating distance
- EN50100 Category 2 and Category 4 compliant
- LED indicators
- Plastic and Metal Housing
- Inputs and Outputs IEC61131-2 compliant and adaptable with any safety module
- To be used together with a Category 2 or Category 4 safety control unit to obtain a safety system EN ISO 13849 compliant

## web contents

- Application notes
- Photos
- Catalogue / Manuals

## code description (SH series)

SH 2 / E - 0 E IA

| | | |
|---|---|---|
| series | SH | M18 safety photocell |
| type | 2 | Type 2, 123 kHz modulation |
| | 4 | Type 4 123 kHz modulation |
| model | E | Emitter unit |
| | R | Receiver unit |
| housing | 0 | Plastic housing, axial emission |
| | 1 | Metal housing, axial emission |
| | 2 | Plastic housing, radial emission |
| | 3 | Metal housing, radial emisison |
| output connection | E | M12 connector output |
| | K | M12 radial connector output |
| logic | IA | Emitter Test Input Logic L = light H = dark, Receiver Output Logic: L = light, H = dark |
| | IC | Emitter Test Input Logic H = light L = dark, Receiver Output Logic: H = light, L = dark |

## code description (TH series)

TH 2 / E - K IA

| | | |
|---|---|---|
| series | TH | M30 safety photocell |
| type | 2 | Type 2, 123 kHz modulation |
| | 6 | Type 4, 123 kHz modulation |
| model | E | Emitter unit |
| | R | Receiver unit |
| output connection | K | M12 radial connector |
| logic | IA | Emitter Test Input Logic L = light H = dark, Receiver Output Logic: L = light, H = dark |
| | IC | Emitter Test Input Logic H = light L = dark, Receiver Output Logic: H = light, L = dark |

## available models (Type 2)

| series | diameter | emission | optic | operating distance (m) | connection | housing | unit | model |
|---|---|---|---|---|---|---|---|---|
| SH2 | M18 | red | Type 2 axial | 10 | M12 axial | plastic | Emitter | SH2/E-0EIC |
| | | | | | | | Receiver | SH2/R-0EIC |
| | | | Type 2 radial | 5 | | | Emitter | SH2/E-2EIC |
| | | | | | | | Receiver | SH2/R-2EIC |
| | | | Type 2 axial | 10 | | metallic | Emitter | SH2/E-1EIC |
| | | | | | | | Receiver | SH2/R-1EIC |
| | | | Type 2 radial | 5 | | | Emitter | SH2/E-3EIC |
| | | | | | | | Receiver | SH2/R-3EIC |
| | | | Type 2 axial | 10 | M12 radial | plastic | Emitter | SH2/E-0KIC |
| | | | | | | | Receiver | SH2/R-0KIC |
| | | | | | | metallic | Emitter | SH2/E-1KIC |
| | | | | | | | Receiver | SH2/R-1KIC |
| TH2 | M30 | | | 60 | | | Emitter | TH2/E-KIC |
| | | | | | | | Receiver | TH2/R-KIC |

## available models (Type 4)

| series | diameter | emission | optic | operating distance (m) | connection | housing | unit | model |
|---|---|---|---|---|---|---|---|---|
| SH4 | M18 | red | Type 4 axial | 10 | M12 axial | plastic | Emitter | SH4/E-0EIC |
| | | | | | | | Receiver | SH4/R-0EIC |
| | | | | | | | Emitter | SH4/E-0EIA |
| | | | | | | | Receiver | SH4/R-0EIA |
| | | | Type 4 radial | 5 | | | Emitter | SH4/E-2EIC |
| | | | | | | | Receiver | SH4/R-2EIC |
| | | | Type 4 axial | 10 | | metallic | Emitter | SH4/E-1EIC |
| | | | | | | | Receiver | SH4/R-1EIC |
| | | | | | | | Emitter | SH4/E-1EIA |
| | | | | | | | Receiver | SH4/R-1EIA |
| | | | Type 4 radial | 5 | | | Emitter | SH4/E-3EIC |
| | | | | | | | Receiver | SH4/R-3EIC |
| | | | type 4 axial | 10 | | plastic | Emitter | SH4/E-0KIA |
| | | | | | M12 radial | | Receiver | SH4/R-0KIA |
| | | | | | | metallic | Emitter | SH4/E-1KIA |
| | | | | | | | Receiver | SH4/R-1KIA |
| TH6 | M30 | | | 60 | | | Emitter | TH6/E-KIC |
| | | | | | | | Receiver | TH6/R-KIC |
| | | | | | | | Emitter | TH6/E-KIA |
| | | | | | | | Receiver | TH6/R-KIA |

P.N.: If used with SBCR03 control unit, **the risulting system is of Type 2.**



ЭйБиЭн www.abn.by

# technical specifications

| | SH axial | SH radial | TH |
|---|---|---|---|
| | | | |
| nominal operating distance Excess Gain = 2 | 0...16 m | 0...7 m | 0...84 m |
| nominal operating distance Excess Gain = 4 | 0...11 m | 0...5 m | 0...60 m |
| model | M18 | | M30 |
| spot diameter | 12 | | 26 |
| minimum detectable object | ø 15 mm | | ø 24 mm |
| emission | red | | |
| Effective Aperture Angle (EAA) | typical 1.8°; ± 2,5° | | |
| operating voltage | 10...30 Vdc | | |
| current comsumption | ≤ 25 mA (emitter);<br>≤ 25 mA (receiver);<br>22 mA (typical, light mode) | | |
| output current | 50 mA; 70 mA max | | |
| emission wavelength | 660 nm | | |
| standard modulation frequency | 123 KHz | | |
| supply voltage UB | 19.2 V...28 V | | |
| residual ripple | ≤ 5 V | | |
| HIGH level output | $U_B$ - 3.2 V ... $U_B$ - 2.5 V (typical) | | |
| LOW level output | 5 V | | |
| reaction time receiver output per transaction LIGHT / DARK | 200 µs, from front to LOW DARK models for IC ,<br>to HIGH for models IA | | |
| reaction time receiver output per transaction DARK /LIGHT | 400 µs, from front to LIGHT UP models for IC ,<br>LOW models for IA | | |
| response time of safety | it would depend on the security utility | | |
| LOW input Test projector | < 5 V IC output inactive ;<br>model IA active issue | | |
| HIGH input Projector test | vin test >> 15 V IC output active ;<br>model IA issue inactive | | |
| test input LOW level (Emitter) | IC models , LOW = DARK ; HIGH = LIGHT<br>IA models , HIGH = DARK ; LOW = LIGHT | | |
| electrical protection class | III | | |
| IP mechanical protection | IP67 (EN60529) | | |
| working temperature | -20 °C... + 55 °C (typical + 20 °C) | | |
| storage temperature | -40°C... + 75°C | | |
| humidity (no condensation) | 15%...95% | | |
| weight | 30 g (plastic);<br>67 g (metallic) | | 212 g |
| shocks | 10 g; 16 ms; (IEC60068-2-6) | | |
| vibration | 10 Hz ... 55 Hz, 1 oct./min, 0.35 mm (IEC 60068-2-6) | | |
| materials | Lens: Glass with PBT ring; Housing: Brass nickel-plated or PBT; M12 plug:PC | | Lens: Glass, aluminium; Housing: Brass nickel plated; End cap: PC; M12 plug: PBT |

no load.

external power supply to the devices must include a brief power failure of up to 20 ms In conformity with EN 60204. Suitable power supplies are commonly available on the market . Operation with the network short-circuit proof max. 8 A. The connections used are protected against reverse polarity. The sensors SH and TH, and the test device downstream, are connected to the same municipality and for paving ground.

must not exceed or fall below of UB tolerances.

the output of the sensor is normally connected to the test device, isn't an OSSD as for IEC 61496-1.

## safety specifications (Machinery Directive)

| Type 2 M18 and M30 safety photocells | |
|---|---|
| Type | 2 (IEC 61496) [1] |
| safety integrity level | SIL1 (IEC 61508), SIL CL 1 (EN 62061) [1] |
| category | 2 (EN ISO 13849) [1] |
| self test frequency [2] | 100/s (EN ISO 13849) |
| maximum frequency of request [3] | 60/min (EN ISO 13849) |
| performance level | PL c (EN ISO 13849) [1] |
| $PFH_d$ [4] | $1 \times 10^{-6}$ |
| TM (life time) | 20 years |

| Type 4 M18 and M30 safety photocells | |
|---|---|
| Type | 4 (IEC 61496) [1] |
| safety integrity level | SIL3 (IEC 61508), SIL CL 3 (EN 62061) [1] |
| category | 4 (EN ISO 13849) [1] |
| performance level | PL e (EN ISO 13849) [1] |
| maximum frequency of request [3] | 60/min (EN ISO 13849) |
| $PFH_d$ [4] | $8.1 \times 10^{-10}$ |
| TM (life time) | 20 years |

[1] Only in combination with suitable test devic [2] The test rate must not be exceeded
[3] Between two requests for a safety-related reaction from the device, at least 100 internal or external tests must be undertaken [4] Average probability of failure per hour, due to a serious error

## electrical diagrams of the connections

### M12 emitter

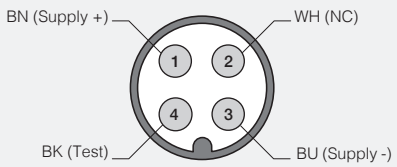


### M12 receiver

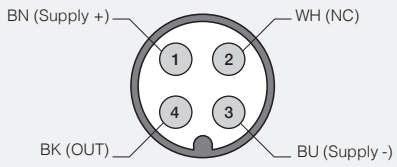


| | |
|---|---|
| BN | brown |
| BU | blue |
| BK | black |
| WH | white |

### 2 sensors caascade connection example

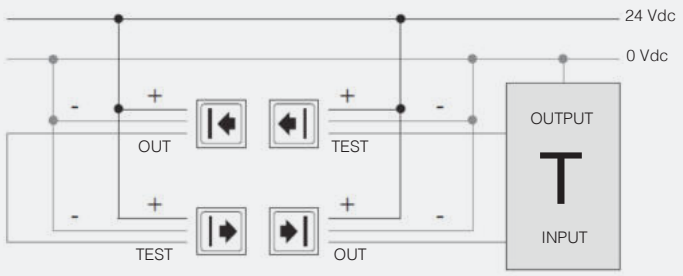


The pairs remote, comprise an emitter and a receiver connected in a chain, that are running the repeater function, must be homogeneous, that is composed of an emitter and a receiver both with the same logic of Test and Exit (both type IC or IA). Couples connected to the test unit must obviously be chosen logically compatible with that unit. It should not exceed a maximum of three pairs of sensors in the chain. If you use more than one pair of monitoring sensors connected in the chain, it must always be strictly observed that the angle of propagation / reception angle of a pair of sensors does not interfere with the other of the same chain. If you use more than one pair of monitoring sensors connected to the same unit and this unit does not use a scanning procedure of the pairs it must be strictly observed that the angle of propagation / reception angle of a pair of sensors does not interfere with the other the same unit. If it takes more units it is possible that pairs of the different units may interfere, in this case the phase of test can fail causing blockages or sporadic system. Only in this case, to avoid interference it is possible to use models with different modulation frequency.



ЭйБиЭн www.abn.by

## dimensions (mm)

plastic housing

| SH2(4)/*-0EIC(IA) | SH2(4)/*-2EIC(IA) |
|---|---|
| 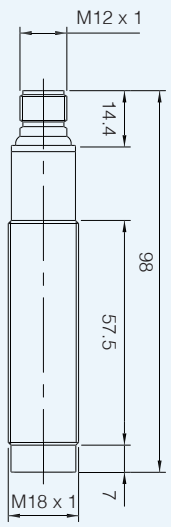 | 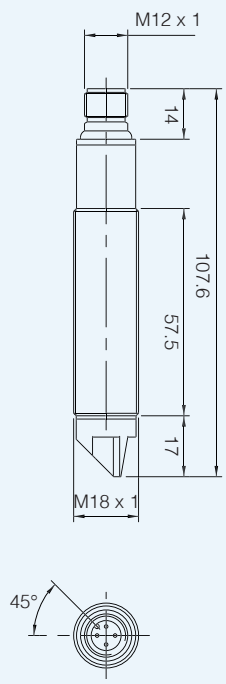 |





## dimensions (mm)

accessories included in all plastic models

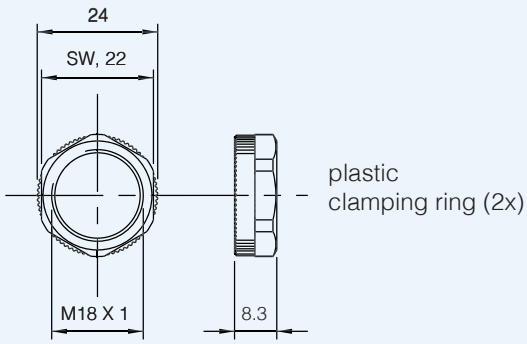



## dimensions (mm)

M18 metal housing

| SH2(4)/*-1EIC(IA) | SH2(4)/*-3EIC(IA) | SH2(4)/*-*KIC(IA) |
|---|---|---|
| 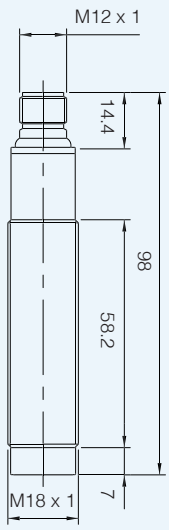 | 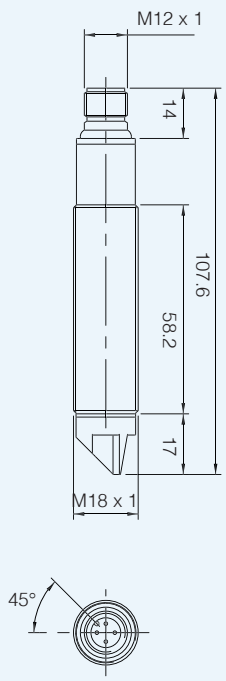 | 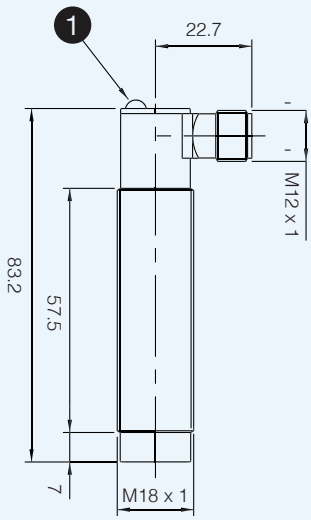 |







1 LED

## dimensions (mm)

accessories included in all M18 metallic models

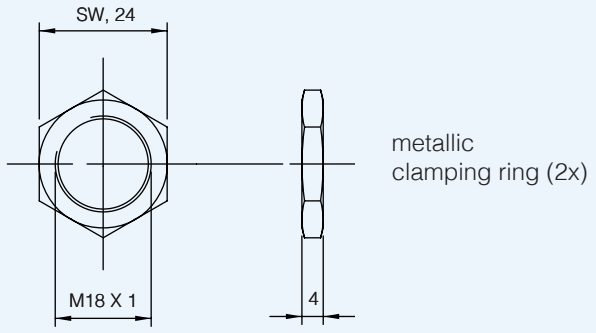


## dimensions (mm)

M30

**TH2(6)/*-1KIC (IA)**

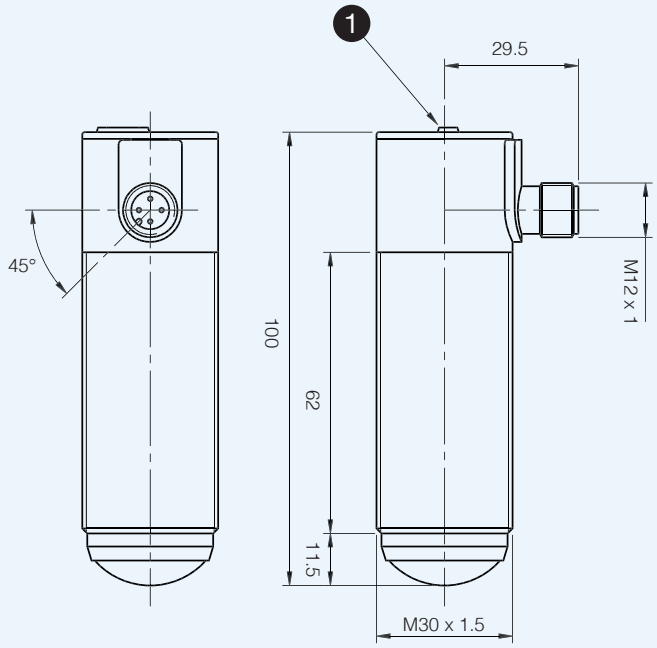


1 LED

## dimensions (mm)

accessories included in all M30 models

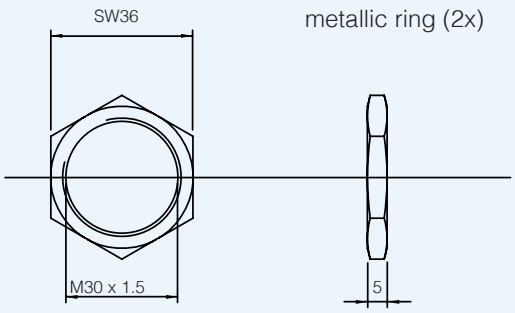




ЭйБиЭн www.abn.by

# LS2, LS2_K, LS2_H series

## Light Curtains

Type 2 according to IEC 61496-1 and 2

## features

- Compact housing (28 x 30 mm) and no dead zone on cap side
- Resolution 30, 40, 50, 90 mm for hand protection and presence control and 2, 3, 4 beams for body protection/access control
- Controlled distance up to: 3, 4,10, 12 m
- Base, Standard versions and Master, Slave version to connect up to 3 sets in cascade configuration
- Selectable Automatic/Manual Restart and EDM integrated functions (Standard models)
- Selectable controlled distance
- IP69K protection models (LS2_K) and models with integrated heating system to reach -25°C operating temperature (LS2_H)
- Standard M12 da 5 and 8 poles connectors

## web contents

- Application notes
- Photos
- Catalogue / Manuals

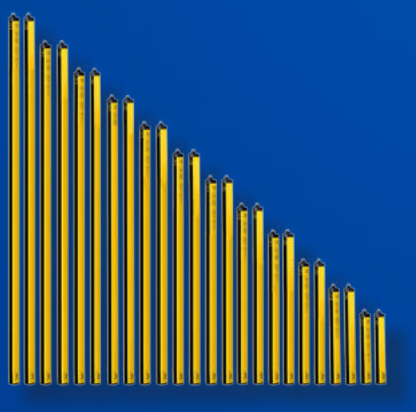

IP69K



## code description

LS2 ER / 30 - 015

| | | |
|---|---|---|
| series | LS2 | Type 2 Safety light Curtains 28 x 30 mm compact housing |
| E/R | ER | Emitter / Receiver couple |
| beams | 30 | Light grid, 30 mm resolution, hand protection |
| | 40 | Light grid, 40 mm resolution, hand protection |
| | 50 | Light grid, 50 mm resolution, presence control |
| | 90 | Light grid, 90 mm resolution, presence control |
| | 0A | 2 beams; body protection, 500 mm resolution |
| | 0B | 3 beams; body protection, 400 mm resolution |
| | 0C | 4 beams; body protection, 300 mm resolution |
| area | 015 ÷ 180 | Protected height from 150 to 1,800 mm (light grids) |
| | 050 ÷ 090 | Protected height 500, 800, 900 mm (multiple light beams) |
| model | | Standard model with selectable MANUAL/AUTOMATIC Restart and EDM functions |
| | B | Base model with integrated AUTOMATIC Restart |
| | M | Master Model with selectable functions |
| | S | Intermediate Slave model |
| | F | Final Slave model |
| protection | | IP65 and IP67 protection, 10° ... 55 °C operating temperature |
| | K | Models in transparent cylindrical housing, IP69K, suitable for applications in the food industry. Resistance to washing with water at 100 bar, 80 °C Housing in PMMA, caps in POM C with silicone seals. Brackets in stainless steel AISI 316L. Operating temperature -10 ... 55 °C. |
| | H | Models in transparent cylindrical casing, IP69K protection, thermostated, suitable for applications in the food industry. Resistance to washing with water at 100 bar, 80 °C. Housing in PMMA, POM C caps and silicone seals. Brackets in stainless steel AISI 316L. Operating temperature -25 ... 55 °C. |

## available models

30 mm resolution; 0...4 / 0...12 m controlled distance

| protected height (mm) | n° of beams | response time (ms) | series |
|---|---|---|---|
| 160 | 8 | 4.5 | LS2ER/30-015B |
| | | | LS2ER/30-015 |
| | | | LS2ER/30-015F |
| 310 | 16 | 6 | LS2ER/30-030B |
| | | | LS2ER/30-030 |
| | | | LS2ER/30-030M |
| | | | LS2ER/30-030F |
| | | | LS2ER/30-030S |
| 460 | 23 | 8 | LS2ER/30-045B |
| | | | LS2ER/30-045 |
| | | | LS2ER/30-045M |
| | | | LS2ER/30-045F |
| | | | LS2ER/30-045S |
| 610 | 31 | 10 | LS2ER/30-060B |
| | | | LS2ER/30-060 |
| | | | LS2ER/30-060M |
| | | | LS2ER/30-060F |
| | | | LS2ER/30-060S |
| 760 | 38 | 11 | LS2ER/30-075B |
| | | | LS2ER/30-075 |
| | | | LS2ER/30-075M |
| | | | LS2ER/30-075F |
| | | | LS2ER/30-075S |
| 910 | 46 | 13 | LS2ER/30-090B |
| | | | LS2ER/30-090 |
| | | | LS4ER/30-090M |
| | | | LS2ER/30-090F |
| | | | LS2ER/30-090S |
| 1,060 | 53 | 14.5 | LS2ER/30-105B |
| | | | LS2ER/30-105 |
| | | | LS2ER/30-105M |
| | | | LS2ER/30-105F |
| | | | LS2ER/30-105S |
| 1,210 | 61 | 16 | LS2ER/30-120B |
| | | | LS2ER/30-120 |
| | | | LS2ER/30-120M |
| | | | LS2ER/30-120F |
| | | | LS2ER/30-120S |
| 1,360 | 68 | 17.5 | LS2ER/30-135B |
| | | | LS2ER/30-135 |
| | | | LS2ER/30-135M |
| | | | LS2ER/30-135F |
| | | | LS2ER/30-135S |
| 1,510 | 76 | 19.5 | LS2ER/30-150B |
| | | | LS2ER/30-150 |
| | | | LS2ER/30-150M |
| | | | LS2ER/30-150F |
| | | | LS2ER/30-150S |
| 1,660 | 83 | 21 | LS2ER/30-165 |
| 1,810 | 91 | 22.5 | LS2ER/30-180 |

## available models

40 mm resolution; 0...4 / 0...12 m controlled distance

| protected height (mm) | n° of beams | response time (ms) | series |
|---|---|---|---|
| 160 | 6 | 4 | LS2ER/40-015B |
| | | | LS2ER/40-015 |
| | | | LS2ER/40-015F |
| 310 | 11 | 5 | LS2ER/40-030B |
| | | | LS2ER/40-030 |
| | | | LS2ER/40-030M |
| | | | LS2ER/40-030F |
| | | | LS2ER/40-030S |
| 460 | | 6 | LS2ER/40-045B |
| | | | LS2ER/40-045 |
| | | | LS2ER/40-045M |
| | | | LS2ER/40-045F |
| | | | LS2ER/40-045S |
| 610 | 21 | 7.5 | LS2ER/40-060B |
| | | | LS2ER/40-060 |
| | | | LS2ER/40-060M |
| | | | LS2ER/40-060F |
| | | | LS2ER/40-060S |
| 760 | 26 | 8.5 | LS2ER/40-075B |
| | | | LS2ER/40-075 |
| | | | LS2ER/40-075M |
| | | | LS2ER/40-075F |



ЭйБиЭн www.abn.by

## available models

40 mm resolution; 0...4 / 0...12 m controlled distance

| protected height (mm) | n° of beams | response time (ms) | series |
|---|---|---|---|
| 760 | 26 | 8.5 | LS2ER/40-075S |
| 910 | 31 | 9.5 | LS2ER/40-090B |
| | | | LS2ER/40-090 |
| | | | LS2ER/40-090M |
| | | | LS2ER/40-090F |
| | | | LS2ER/40-090S |
| 1,060 | 36 | 10.5 | LS2ER/40-105B |
| | | | LS2ER/40-105 |
| | | | LS2ER/40-105M |
| | | | LS2ER/40-105F |
| | | | LS2ER/40-105S |
| 1,210 | 41 | 11.5 | LS2ER/40-120B |
| | | | LS2ER/40-120 |
| | | | LS2ER/40-120M |
| | | | LS2ER/40-120F |
| | | | LS2ER/40-120S |
| 1,360 | 46 | 13 | LS2ER/40-135B |
| | | | LS2ER/40-135 |
| | | | LS2ER/40-135M |
| | | | LS2ER/40-135F |
| | | | LS2ER/40-135S |
| 1,519 | 51 | 14 | LS2ER/40-150B |
| | | | LS2ER/40-150 |
| | | | LS2ER/40-150M |
| | | | LS2ER/40-150F |
| | | | LS2ER/40-150S |

## available models

50 mm resolution; 0...4 / 0...12 m controlled distance

| protected height (mm) | n° of beams | response time (ms) | series |
|---|---|---|---|
| 160 | 4 | 3.5 | LS2ER/50-015B |
| | | | LS2ER/50-015 |
| | | | LS2ER/50-015F |
| 310 | 8 | 4.5 | LS2ER/50-030B |
| | | | LS2ER/50-030 |
| | | | LS2ER/50-030M |
| | | | LS2ER/50-030F |
| | | | LS2ER/50-030S |

## available models

50 mm resolution; 0...4 / 0...12 m controlled distance

| protected height (mm) | n° of beams | response time (ms) | series |
|---|---|---|---|
| 460 | 12 | 5.5 | LS2ER/50-045B |
| | | | LS2ER/50-045 |
| | | | LS2ER/50-045M |
| | | | LS2ER/50-045F |
| | | | LS2ER/50-045S |
| 610 | 16 | 6 | LS2ER/50-060B |
| | | | LS2ER/50-060 |
| | | | LS2ER/50-060M |
| | | | LS2ER/50-060F |
| | | | LS2ER/50-060S |
| 760 | 20 | 7 | LS2ER/50-075B |
| | | | LS2ER/50-075 |
| | | | LS2ER/50-075M |
| | | | LS2ER/50-075F |
| | | | LS2ER/50-075S |
| 910 | 24 | 8 | LS2ER/50-090B |
| | | | LS2ER/50-090 |
| | | | LS4ER/50-090M |
| | | | LS2ER/50-090F |
| | | | LS2ER/50-090S |
| 1,060 | 28 | 9 | LS2ER/50-105B |
| | | | LS2ER/50-105 |
| | | | LS2ER/50-105M |
| | | | LS2ER/50-105F |
| | | | LS2ER/50-105S |
| 1,210 | 32 | 10 | LS2ER/50-120B |
| | | | LS2ER/50-120 |
| | | | LS2ER/50-120M |
| | | | LS2ER/50-120F |
| | | | LS2ER/50-120S |
| 1,360 | 36 | 10.5 | LS2ER/50-015B |
| | | | LS2ER/50-015 |
| | | | LS2ER/50-015F |
| | | | LS2ER/50-030B |
| | | | LS2ER/50-030 |
| 1,510 | 40 | 11.5 | LS2ER/50-030M |
| | | | LS2ER/50-030F |
| | | | LS2ER/50-030S |
| | | | LS2ER/50-045B |
| | | | LS2ER/50-045 |

## available models

90 mm resolution; 0...4 / 0...12 m controlled distance

| protected height (mm) | n° of beams | response time (ms) | series |
|---|---|---|---|
| 310 | 4 | 3.5 | LS2ER/90-030B |
| | | | LS2ER/90-030 |
| | | | LS2ER/90-030M |
| | | | LS2ER/90-030F |
| | | | LS2ER/90-030S |
| 460 | 6 | 4 | LS2ER/90-045B |
| | | | LS2ER/90-045 |
| | | | LS2ER/90-045M |
| | | | LS2ER/90-045F |
| | | | LS2ER/90-045S |
| 610 | 8 | 4.5 | LS2ER/90-060B |
| | | | LS2ER/90-060 |
| | | | LS2ER/90-060M |
| | | | LS2ER/90-060F |
| | | | LS2ER/90-060S |
| 760 | 10 | 5 | LS2ER/90-075B |
| | | | LS2ER/90-075 |
| | | | LS2ER/90-075M |
| | | | LS2ER/90-075F |
| | | | LS2ER/90-075S |
| 910 | 12 | 5.5 | LS2ER/90-090B |
| | | | LS2ER/90-090 |
| | | | LS2ER/90-090M |
| | | | LS2ER/90-090F |
| | | | LS2ER/90-090S |
| 1,060 | 14 | 6 | LS2ER/90-105B |
| | | | LS2ER/90-105 |
| | | | LS2ER/90-105M |
| | | | LS2ER/90-105F |
| | | | LS2ER/90-105S |
| 1,210 | 16 | 6 | LS2ER/90-120B |
| | | | LS2ER/90-120 |
| | | | LS2ER/90-120M |
| | | | LS2ER/90-120F |
| | | | LS2ER/90-120S |
| 1,360 | 18 | 6.5 | LS2ER/90-135B |
| | | | LS2ER/90-135 |
| | | | LS2ER/90-135M |
| | | | LS2ER/90-135F |
| | | | LS2ER/90-135S |
| 1,510 | 20 | 7 | LS2ER/90-150B |
| | | | LS2ER/90-150 |

## available models

500 mm resolution; 0...4 / 0...12 m controlled distance

| protected height (mm) | n° of beams | response time (ms) | series |
|---|---|---|---|
| 510 | 2 | 3 | LS2ER/0A-050B |
| | | | LS2ER/0A-050 |
| | | | LS2ER/0A-050M |
| | | | LS2ER/0A-050F |
| | | | LS2ER/0A-050S |

## available models

400 mm resolution; 0...4 / 0...12 m controlled distance

| protected height (mm) | n° of beams | response time (ms) | series |
|---|---|---|---|
| 310 | 3 | 3.5 | LS2ER/0B-080B |
| | | | LS2ER/0B-080 |
| | | | LS2ER/0B-080M |
| | | | LS2ER/0B-080F |
| | | | LS2ER/0B-080S |

## available models

300 mm resolution; 0...4 / 0...12 m controlled distance

| protected height (mm) | n° of beams | response time (ms) | series |
|---|---|---|---|
| 910 | 4 | 3.5 | LS2ER/0C-090B |
| | | | LS2ER/0C-090 |
| | | | LS2ER/0C-090M |

## available models

30 mm resolution; 0...3 / 0...10 m controlled distance

| protected height (mm) | n° of beams | response time (ms) | series |
|---|---|---|---|
| 160 | 8 | 4.5 | LS2ER/30-015K |
| 310 | 16 | 6 | LS2ER/30-030K |
| 460 | 23 | 8 | LS2ER/30-045K |
| 610 | 31 | 10 | LS2ER/30-060K |
| 760 | 38 | 11 | LS2ER/30-075K |
| 910 | 46 | 13 | LS2ER/30-090K |
| 1,060 | 53 | 14.5 | LS2ER/30-105K |
| 1,210 | 61 | 16 | LS2ER/30-120K |
| 1,360 | 68 | 17.5 | LS2ER/30-135K |
| 1,510 | 76 | 19.5 | LS2ER/30-150K |



ЭйБиЭн www.abn.by

## available models

30 mm resolution; 0...3 / 0...10 m controlled distance

| protected height (mm) | n° of beams | response time (ms) | series |
|---|---|---|---|
| 160 | 8 | 4.5 | LS2ER/30-015H |
| 310 | 16 | 6 | LS2ER/30-030H |
| 460 | 23 | 8 | LS2ER/30-045H |
| 610 | 31 | 10 | LS2ER/30-060H |
| 769 | 38 | 11 | LS2ER/30-075H |
| 910 | 46 | 13 | LS2ER/30-090H |
| 1,060 | 53 | 14.5 | LS2ER/30-105H |
| 1,210 | 61 | 16 | LS2ER/30-120H |
| 1,360 | 68 | 17.5 | LS2ER/30-135H |
| 1,510 | 76 | 19.5 | LS2ER/30-150H |

## available models

0...3 / 0...10 m controlled distance

| n° of beams | protected height (mm) | controlled area (mm) | response time (ms) | series |
|---|---|---|---|---|
| 2 | 500 | 510 | 4.5 | LS2ER/0A-050K |
| 3 | 400 | 810 | 6 | LS2ER/0B-080K |
| 4 | 300 | 910 | 8 | LS2ER/0C-090K |

| n° of beams | protected height (mm) | controlled area (mm) | response time (ms) | series |
|---|---|---|---|---|
| 2 | 500 | 510 | 4.5 | LS2ER/0A-050H |
| 3 | 400 | 810 | 6 | LS2ER/0B-080H |
| 4 | 300 | 910 | 8 | LS2ER/0C-090H |

# technical specifications

| | LS2ER/**-***_ | |
|---|---|---|
| operating voltage | 19.2...28.8 Vdc | PELV power supplier according to EN 60204-1 Cap.6.4 |
| power consumption, Receiver | 2 W | no load |
| power consumption, Emitter | 1 W | |
| power consumption, heater | 2...10 W | H models, IP69K with heater |
| output type | 2 x PNP | OSSD safety outputs |
| output current | 400 mA | higher values are considered overload |
| equivalent resistive load | 60 Ω | lower values are considered short circuit |
| capacitive load | 0.82 µF | lower values may be considered short circuit |
| recovery time | 2 s | |
| response time | 2.5...20 ms | |
| effective aperture angle | ± 5° | IEC 61496-1 |
| artificial light rejection | according to IEC 61496-2 | according to the reported standards |
| ambient light rejection | according to IEC 61496-2 | |
| IP mechanical protection (standard models) | IP65 and IP67 | without any additional precaution the device can't be used for outdoor applications |
| IP mechanical protection (special models) | IP65, IP67 and IP69K | external transparent tube resistant against 100 bar water jets |
| operating temperature | -10...+55°C | no condensation |
| operating temperature, K models | -10...+55°C | no condensation, models without internal heater |
| operating temperature, H models | -25...+55°C | models with internal heater |
| storage temperature | -25...+70°C | to be respected also during transportation |
| humidity | 95% | no condensation |
| vibrations | according to IEC 61496-1 | according to the reported standards |
| shocks | according to IEC 61496-1 | |
| cable length (power supply/outputs) | 100 m | cable section 0.34 mm2 (to respect max length) |
| max cable legth for Master Slave interconnections | 50 m | |
| dimension (IP67 models) | 28 (front) x 30 mm | painted aluminium RAL 1012 |
| tube (IP69K models) | ø 56 mm | |
| connectors models LS2ER/**-***B | Emitter 1 x M12, 5p, male<br>Receiver 1 x M12, 5p male | |
| connectors models LS2ER/**-*** | Emitter 1 x M12, 5p, male<br>Receiver 1 x M12, 8p male | |
| connectors models LS2ER/**-***M | Emitter 2 x M12, 5p, male<br>Receiver 1 x M12, 8p male<br>+ 1 x M12, 5p male | |
| connectors models LS2ER/**-***S | Emitter 2 x M12, 5p, male<br>Receiver 2 x M12, 5p male | |
| connectors models LS2ER/**-***F | Emitter 1 x M12, 5p, male<br>Receiver 1 x M12, 5p male | |
| connectors models LS2ER/**-***K | Emitter cable 5 wires<br>Receiver cable 8 wires | |
| connectors models LS2ER/**-***H | Emitter cable 8 wires<br>Receiver cable 10 wires | |



ЭйБиЭн www.abn.by

# safety parameters

| LS2ER/30-***_ | 015 | 030 | 045 | 060 | 075 | 090 | 105 | 120 | 135 | 150 | 165 | 180 |
|---|---|---|---|---|---|---|---|---|---|---|---|---|
| height (mm) | 160 | 310 | 460 | 610 | 760 | 910 | 1,060 | 1,210 | 1,360 | 1,510 | 1,660 | 1,810 |
| number of beams | 8 | 16 | 23 | 31 | 38 | 46 | 53 | 61 | 68 | 76 | 83 | 91 |
| response time (ms) | 4.5 | 6 | 8 | 10 | 11 | 13 | 14.5 | 16 | 17.5 | 19.5 | 21 | 22.5 |
| response time Master + Slave (ms) | Ttot = [0.1104 * (Nr Slave1 + Nr Master) + 1.1044] * 2 (Master + 1 Slave) | | | | | | | | | | | |
| response time Master + 2 Slave (ms) | Ttot = [0.1104 * (Nr Slave1 + Nr Slave2 + Nr Master) + 1.3228] * 2 (Master + 2 Slave) | | | | | | | | | | | |
| Type (1) | 2 | | | | | | | | | | | |
| SIL(2) | 1 | | | | | | | | | | | |
| SILCL (3) | 1 | | | | | | | | | | | |
| PL (4) | c | | | | | | | | | | | |
| PFHd | 2.04E-08 | 2.66E-08 | 3.30E-08 | 3.92E-08 | 4.57E-08 | 5.19E-08 | 5.83E-08 | 6.45E-08 | 7.09E-08 | 7.71E-08 | 8.35E-08 | 8.98E-08 |
| DCavg | 91.30% | 91.00% | 90.90% | 90.70% | 90.60% | 90.60% | 90.50% | 90.50% | 90.40% | 90.40% | 90.40% | 90.30% |
| MTTFd (years) | 100 | | | | | | | | | | | |
| CFF | 80% | | | | | | | | | | | |

| LS2ER/40-***_ | 015 | 030 | 045 | 060 | 075 | 090 | 105 | 120 | 135 | 150 |
|---|---|---|---|---|---|---|---|---|---|---|
| height (mm) | 160 | 310 | 460 | 610 | 760 | 910 | 1,060 | 1,210 | 1,360 | 1,510 |
| number of beams | 6 | 11 | 16 | 21 | 26 | 31 | 36 | 41 | 46 | 51 |
| response time (ms) | 4 | 5 | 6 | 7.5 | 8.5 | 9.5 | 10.5 | 11.5 | 13 | 14 |
| response time Master + Slave (ms) | Ttot = [0.1104 * (Nr Slave1 + Nr Master) + 1.1044] * 2 (Master + 1 Slave) | | | | | | | | | |
| response time Master + 2 Slave (ms) | Ttot = [0.1104 * (Nr Slave1 + Nr Slave2 + Nr Master) + 1.3228] * 2 (Master + 2 Slave) | | | | | | | | | |
| Type (1) | 2 | | | | | | | | | |
| SIL(2) | 1 | | | | | | | | | |
| SILCL (3) | 1 | | | | | | | | | |
| PL (4) | c | | | | | | | | | |
| PFHd | 1.83E-08 | 2.29E-08 | 2.73E-08 | 3.18E-08 | 3.63E-08 | 4.08E-08 | 4.53E-08 | 4.98E-08 | 5.43E-08 | 5.88E-08 |
| DCavg | 94.60% | 93.80% | 93.20% | 92.80% | 92.40% | 92.20% | 92.00% | 91.80% | 91.70% | 91.50% |
| MTTFd (years) | 100 | | | | | | | | | |
| CFF | 80% | | | | | | | | | |

| LS2ER/50-***_ | 015 | 030 | 045 | 060 | 075 | 090 | 105 | 120 | 135 | 150 |
|---|---|---|---|---|---|---|---|---|---|---|
| height (mm) | 160 | 310 | 460 | 610 | 760 | 910 | 1,060 | 1,210 | 1,360 | 1,510 |
| number of beams | 4 | 8 | 12 | 16 | 20 | 24 | 28 | 32 | 36 | 40 |
| response time (ms) | 3.5 | 4.5 | 5.5 | 6 | 7 | 8 | 9 | 10 | 10.5 | 11.5 |
| response time Master + Slave (ms) | Ttot = [0.1104 * (Nr Slave1 + Nr Master) + 1.1044] * 2 (Master + 1 Slave) | | | | | | | | | |
| response time Master + 2 Slave (ms) | Ttot = [0.1104 * (Nr Slave1 + Nr Slave2 + Nr Master) + 1.3228] * 2 (Master + 2 Slave) | | | | | | | | | |
| Type (1) | 2 | | | | | | | | | |
| SIL(2) | 1 | | | | | | | | | |
| SILCL (3) | 1 | | | | | | | | | |
| PL (4) | c | | | | | | | | | |
| PFHd | 1.75E-08 | 2.13E-08 | 2.47E-08 | 2.85E-08 | 3.19E-08 | 3.57E-08 | 3.91E-08 | 4.29E-08 | 4.63E-08 | 5.01E-08 |
| DCavg | 94.80% | 94.00% | 93.50% | 93.10% | 92.80% | 92.50% | 92.30% | 92.10% | 91.90% | 91.80% |
| MTTFd (years) | 100 | | | | | | | | | |
| CFF | 80% | | | | | | | | | |

(1) ref. CEI EN 61496-1; CEI EN 61496-2 (2) ref. CEI EN 61508:2002 (3) ref. CEI EN 62061 + CEI EN 62061/EC2 (4) ref. UNI EN ISO 13849-1

# safety parameters

| LS2ER/90-***_ | 030 | 045 | 060 | 075 | 090 | 105 | 120 | 135 | 150 |
|---|---|---|---|---|---|---|---|---|---|
| height (mm) | 310 | 460 | 610 | 760 | 910 | 1.060 | 1.210 | 1.360 | 1.510 |
| number of beams | 4 | 6 | 8 | 10 | 12 | 14 | 16 | 18 | 20 |
| response time (ms) | 3.5 | 4 | 4.5 | 5 | 5.5 | 6 | 6 | 6.5 | 7 |
| response time Master + Slave (ms) | Ttot = [0.1104 * (Nr Slave1 + Nr Master) + 1.1044] * 2 (Master + 1 Slave)) | | | | | | | | |
| response time Master + 2 Slave (ms) | Ttot = [0.1104 * (Nr Slave1 + Nr Slave2 + Nr Master) + 1.3228] * 2 (Master + 2 Slave) | | | | | | | | |
| Type [1] | 2 | | | | | | | | |
| SIL[2] | 1 | | | | | | | | |
| SILCL [3] | 1 | | | | | | | | |
| PL [4] | c | | | | | | | | |
| PFHd | 1.82E-08 | 2.05E-08 | 2.27E-08 | 2.50E-08 | 2.72E-08 | 2.95E-08 | 3.18E-08 | 3.41E-08 | 3.63E-08 |
| DCavg | 94.70% | 94.20% | 93.80% | 93.50% | 93.20% | 93.00% | 92.80% | 92.60% | 92.40% |
| MTTFd (years) | 100 | | | | | | | | |
| CFF | 80% | | | | | | | | |

| LS2ER/**-***_ | 0A-050 | 0B-080 | 0C-090 |
|---|---|---|---|
| height (mm) | 500 | 800 | 900 |
| number of beams | 2 | 3 | 4 |
| response time (ms) | 3 | 3.5 | 3.5 |
| response time Master + Slave (ms) | Ttot = [0.1104 * (Nr Slave1 + Nr Master) + 1.1044] * 2 (Master + 1 Slave) | | |
| response time Master + 2 Slave (ms) | Ttot = [0.1104 * (Nr Slave1 + Nr Slave2 + Nr Master) + 1.3228] * 2 (Master + 2 Slave) | | |
| Type [1] | 2 | | |
| SIL[2] | 1 | | |
| SILCL [3] | 1 | | |
| PL [4] | c | | |
| PFHd | 1.71E-08 | 1.87E-08 | 2.02E-08 |
| DCavg | 94.90% | 94.60% | 94.20% |
| MTTFd (years) | 100 | | |
| CFF | 80% | | |

[1] ref. CEI EN 61496-1; CEI EN 61496-2 [2] ref. CEI EN 61508 [3] ref. CEI EN 62061 + CEI EN 62061/EC2 [4] ref. UNI EN ISO 13849-1



ЭйБиЭн www.abn.by

# electrical diagrams of the connections

## LS2 series receiver unit

M12
(8 poles male)

LS2ER / **-***
LS2ER / **-***M

| pin | color | signal | type | description |
|---|---|---|---|---|
| 1 | WH | OSSD1 | OUT | first safety static output (PNP) |
| 2 | BN | $24V_{DC}$ | POWER | power supply input |
| 3 | GN | OSSD2 | OUT | second safety static output (PNP) |
| 4 | YE | EDM | IN | connection to Restart and/or external control contacts (EDM) |
| 5 | GY | Mode_A | IN | selection of the Start/Restart/EDM mode |
| 6 | PK | Mode_B | IN | selection of the Start/Restart/EDM mode |
| 7 | BU | 0V | POWER | supply voltage reference |
| 8 | RD | FE | GND | functional earth |

8 poles cable

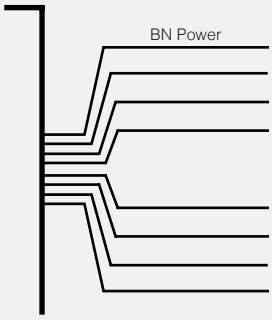


possible combinations

| pin4 (YE) | pin5 (GY) | pin6 (RK) | function |
|---|---|---|---|
| $24V_{DC}$ | $24V_{DC}$ | 0V | AUTO |
| K1 + K2 $+24V_{DC}$ | $24V_{DC}$ | 0V | AUTO + EDM |
| restart $+24V_{DC}$ | 0V | $24V_{DC}$ | MANUAL |
| K1 + K2 + restart $+24V_{DC}$ | 0V | $24V_{DC}$ | MANUAL + EDM |

| | | | |
|---|---|---|---|
| BK | black | OG | orange |
| BN | brown | GN | green |
| RD | red | BU | blue |
| YE | yellow | GY | grey |
| WH | white | VT | violet |
| PK | pink | | |

NOTE: On these Standard and Master models it is possible to choose the operating modes by changing the wiring. By using the EDM function it is possible to extend the safety control to the contactors controlled downstream, that must be the type with guided contacts and approved for safety applications. With this model of curtain you can use the relay module SB300, but the EDM input must be connected.

M12
(5 poles male)

LS2ER / **-***B

| pin | color | signal | type | description |
|---|---|---|---|---|
| 1 | BN | $24V_{DC}$ | POWER | power supply input |
| 2 | WH | OSSD1 | OUT | range or Test selection input |
| 3 | BU | 0V | POWER | supply voltage reference |
| 4 | BK | OSSD2 | OUT | range or Test selection input |
| 5 | GY | FE | GND | functional earth |

NOTE: These Base models with automatic restart do not have the EDM function, the device downstream must therefore be able to control its own safety integrity independently.
With this model of curtain you can not use the relay module SB300, because the EDM input is not available.

# electrical diagrams of the connections

10 poles cable
(IP69K with heater receiver unit)

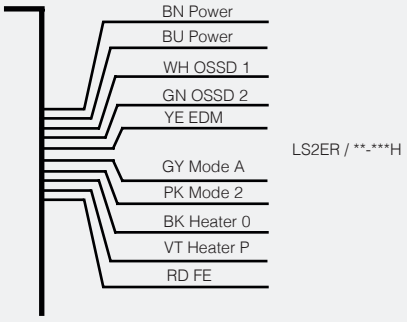


| color | signal | type | description |
|---|---|---|---|
| BN | $24V_{DC}$ | POWER | power supply input |
| BU | 0V | POWER | supply voltage reference |
| WH | OSSD1 | OUT | first safety static output (PNP) |
| GN | OSSD2 | OUT | second safety static output (PNP) |
| YE | EDM | IN | connection to Restart and/or external control contacts (EDM) |
| GY | Mode_A | IN | selection of the Start/Restart/EDM mode |
| PK | Mode_B | IN | selection of the Start/Restart/EDM mode |
| BK | Heater 0 | POWER | heater supply common |
| PK | Heater p | POWER | heater supply 24V DC or AC |
| BK | FE | GND | functional earth |

possible combinations

| YE | GY | PK | function |
|---|---|---|---|
| $24V_{DC}$ | | 0V | AUTO |
| K1 + K2 $+24V_{DC}$ | $24V_{DC}$ | 0V | AUTO + EDM |
| restart $+24V_{DC}$ | 0V | $24V_{DC}$ | MANUAL |
| K1 + K2 + restart $+24V_{DC}$ | 0V | $24V_{DC}$ | MANUAL + EDM |
| x | 0V | | NOT ADMITTED |
| x | $24V_{DC}$ | | NOT ADMITTED |

NOTE: On these Standard models it is possible to choose the operating modes by changing the wiring. By using the EDM function it is possible to extend the safety control to the contactors controlled downstream, that must be the type with guided contacts and approved for safety applications. The supply voltage of the thermostated heater can be indifferently 24VDC or 24VAC. With this model of curtain you can use the relay module SB300, but the EDM input must be connected.

## LS2 series emitter unit

M12
(5 poles male connector)

LS2ER / **-***
LS2ER / **-***M

| pin | color | signal | type | description |
|---|---|---|---|---|
| 1 | BN | POWER | OUT | power supply input |
| 2 | WH | IN | POWER | range or test selection input |
| 3 | BU | POWER | OUT | supply voltage reference |
| 4 | BK | IN | | range or test selection input |
| 5 | GY | GND | IN | functional earth |

5 poles cable

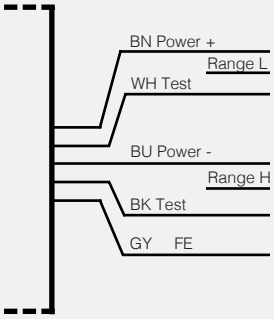


LS2ER / **-***K

possible combinations

| pin2 (WH) | pin6 (BK) | function |
|---|---|---|
| LO | | test |
| LO | HI | high range |
| HI | LO | low range |
| HI | | not admitted |
| Levels: LO = < 5 V or open; HI = 11 to 30 V | | |

NOTE: The Test contact is necessary only if the safety chain of the receiver downstream must be periodically checked. If the Test is not necessary (the safety light curtain has already been tested independently) replace the contact with direct wiring at +24 $V_{DC}$.



ЭйБиЭн www.abn.by

## LS2 series emitter IP68K with heater receiver unit

8 poles cable
(IP69K with heater receiver unit)

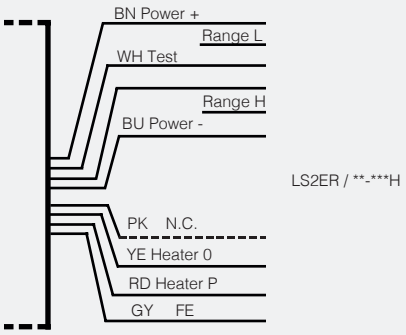


| color | signal | type | description |
|---|---|---|---|
| BN | $24V_{DC}$ | POWER | power supply input |
| WH | Range L/Test | IN | range or test selection input |
| BU | 0V | POWER | supply voltage reference |
| GN | Range H/Test | IN | range or test selection input |
| PK | not connected | N.C. | not connected |
| YE | heater 0 | POWER | heater supply common |
| RD | heater P | POWER | heater supply 24V DC or AC |
| GY | FE | GND | functional earth |

### possible combinations

| WH | GN | function |
|---|---|---|
| LO | | test |
| LO | HI | high range |
| HI | LO | low range |
| HI | | not admitted |
| Levels: LO = <5V or open; HI = 11 to 30V | | |

NOTE: The Test contact is necessary only if the safety chain of the receiver downstream must be periodically checked. If the Test is not necessary (the safety light curtain has already been tested independently) replace the contact with direct wiring at + 24 $V_{DC}$. The supply voltage of the thermostated heater can be indifferently 24 $V_{DC}$ or 24 $V_{AC}$. The PK cable is not connected internally.

## LS2 series emitter and receiver unit : master slave secondary connecotrs

M12
(5 poles male)

LS2ER / **-***M
LS2ER / **-***S
LS2ER / **-***F

| pin | color | signal | type | description |
|---|---|---|---|---|
| 1 | BN | $24V_{DC}$ | POWER | power supply (supply line for the upstream device) |
| 2 | WH | Line 1 | IN/OUT | communication line 1 |
| 3 | BU | 0V | POWER | power supply reference (supply line for the upstream device) |
| 4 | BK | Line 2 | IN/OUT | communication line 2 |
| 5 | GY | FE | GND | functional earth |

NOTE: Preferably use Female/Female pre-wired extension cables (it is not permitted to access the connection lines).

# dimensions (mm)

## Dimensions of Standard, Base, Final models; view of the base and head with relevant connectors; see Tab.:1 and 3

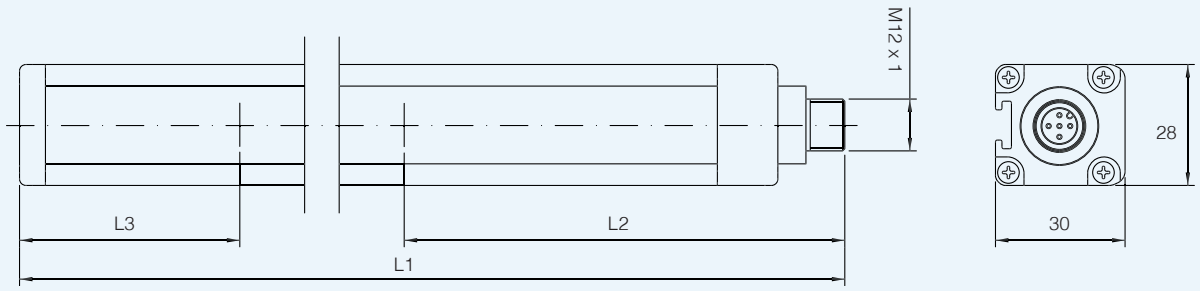

# dimensions (mm)

**Dimensions of Master and Slave models; view of the base and head with relevant connectors; see Tab.: 2 and 3 (mm)**

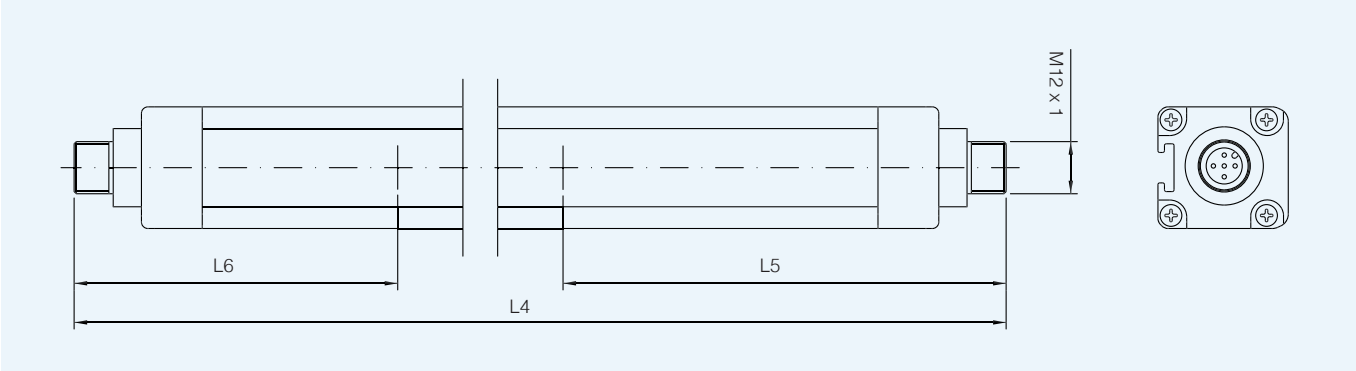


TAB.1

| LS2 series | | size models with rays terraced | | | | | | | | | | |
|---|---|---|---|---|---|---|---|---|---|---|---|---|
| paired models | | *** | | | | | | | | | | dimensions (mm) |
| | | 015 | 030 | 045 | 060 | 075 | 090 | 105 | 120 | 135 | 150 | |
| LS2ER/**-***<br>LS2ER/**-***B<br>LS2ER/**-***F | standard, base, final | 213 | 363 | 513 | 663 | 813 | 963 | 1,113 | 1,263 | 1,413 | 1,563 | L1 |
| | | 61.5 | | | | | | | | | | L2 (bottom-most beam) |
| | | 11 | | | | | | | | | | L3 (top-most beam) |
| LS2ER/**-***M<br>LS2ER/**-***S | master and slave | 236.5 | 386.5 | 536.5 | 686.5 | 536.5 | 986.5 | 1,136.5 | 1,286.5 | 1,436.5 | 1,566.5 | L4 |
| | | 61.5 | | | | | | | | | | L5 (bottom-most beam) |
| | | 34.5 | | | | | | | | | | L6 (top-most beam) |

TAB.2

| LS2 series | | size models with multiple beams | | | |
|---|---|---|---|---|---|
| paired models | | *** | | | dimensions (mm) |
| | | 0A-050 | 0B-080 | 0C-090 | |
| LS2ER/**-***<br>LS2ER/**-***B<br>LS2ER/**-***F | standard, base, final | 653 | 953 | 1,053 | L1 |
| | | 102 | | | L2 (bottom-most beam) |
| | | 51 | | | L3 (top-most beam) |
| LS2ER/**-***M<br>LS2ER/**-***S | master and slave | 677 | 977 | 1,077 | L4 |
| | | 102 | | | L5 (bottom-most beam) |
| | | 75 | | | L6 (top-most beam) |

TAB.3

| LS2 series | | termination types and connectors | | | | | | | |
|---|---|---|---|---|---|---|---|---|---|
| models | | LS2R (receiver) | | | | LS2R (emitter) | | | |
| | | base view | connector | base view | connector | base view | connector | vista base | connector |
| LS2ER/**-*** | standard | C | M12, 8p, M | A | - | B | M12, 5p, M | A | - |
| LS2ER/**-***B | base | B | M12, 5p, M | A | - | B | M12, 5p, M | A | - |
| LS2ER/**-***F | final | B (1) | M12, 5p, M | A | - | B (1) | M12, 5p, M | A | - |
| LS2ER/**-***M | master | F | M12, 8p, M | D (1) | M12, 5p, M | E | M12, 5p, M | D (1) | M12, 5p, M |
| LS2ER/**-***S | slave | E (1) | M12, 5p, M | D (1) | M12, 5p, M | E (1) | M12, 5p, M | D (1) | M12, 5p, M |

NOTE: These connectors are dedicated to a communication BUS of the Master/ Slave chain, it is not permissible to access the lines, always use cord sets.



ЭйБиЭн www.abn.by

## accessories

| ST204* / outfit mounting accessories | | | |
|---|---|---|---|
| product | to used with | dimensions (mm) | description / installation |
| | LS2 series | 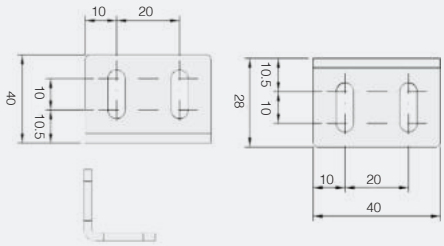  | L Bracket<br>Supplied as standard, 4 pieces to couple to the length from 300 to 1,050, 6 pieces for the length from 1,200 to 1,500. |
| | LS2 series | 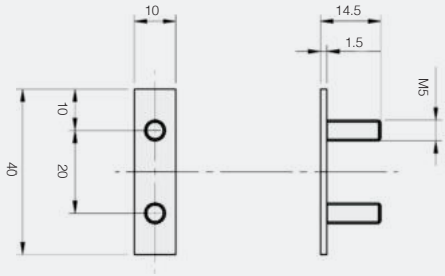  | Insert with threaded bolts and nuts<br>Supplied as standard, in a number corresponding to the brackets. |

## outfit brackets mounting

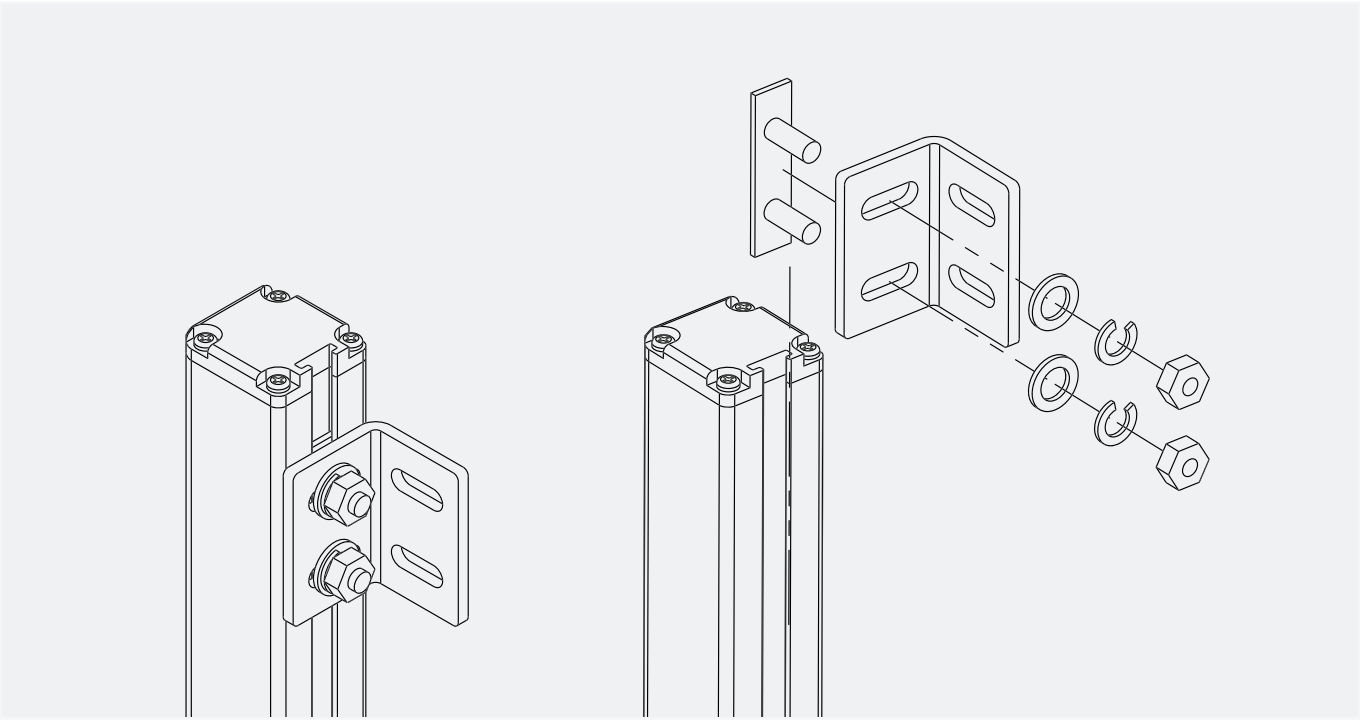

# dimensions (mm)

## IP69K models

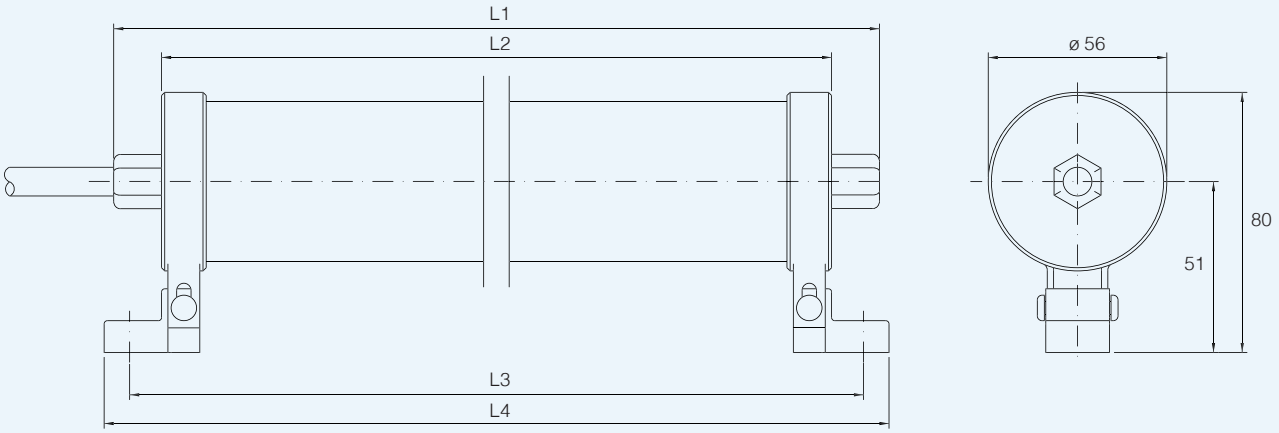


The light Curtain is supplied already fitted inside the transparent housing.
The power cord has a standard length of 10 meters and a maximum diameter of 6 mm. The brackets are included.

| models | 150 | 300 | 450 | 600 | 750 | 900 | 1,050 | 1,200 | 1,350 | 1,500 | 2B | 3B | 4B |
|---|---|---|---|---|---|---|---|---|---|---|---|---|---|
| L1 dimensions (mm) | 320 | 470 | 620 | 770 | 920 | 1,070 | 1,220 | 1,370 | 1,520 | 1,670 | 760 | 1,060 | 1,160 |
| L2 dimensions (mm) | 290 | 440 | 620 | 740 | 890 | 1,040 | 1,190 | 1,340 | 1,490 | 1,640 | 730 | 1,030 | 1,130 |
| L3 (± 3) dimensions (mm) | 315 | 465 | 590 | 765 | 915 | 1,065 | 1,215 | 1,365 | 1,515 | 1,665 | 755 | 1,055 | 1,155 |
| L4 dimensions (mm) | 337 | 487 | 637 | 787 | 937 | 1,087 | 1,237 | 1,387 | 1,537 | 1,687 | 777 | 1,077 | 1,177 |



ЭйБиЭн www.abn.by

# LS4, LS4_K, LS4_H series

## Light Curtains

Type 4 according to IEC 61496-1 and IEC 61496-2

## features

- Compact housing (28 x 30 mm) and no dead zone on cap side
- Resolution 14 mm for finger protection, 20, 30 , 40 mm for hand protection, 50, 90 mm for presence control and 2, 3, 4 beams for body protection/access control
- Controlled distance up to: 3, 4, 6, 10, 12 m
- Base, Standard versions and Master, Slave version to connect up to 3 sets in cascade configuration
- Selectable Automatic/Manual Restart and EDM integrated functions (Standard models)
- Selectable controlled distance
- IP69K protection models (LS4_K) and models with integrated heating system to reach -25°C operating temperature (LS4_H)
- Standard M12 da 5 and 8 poles connectors

## web contents

- Application notes
- Photos
- Catalogue / Manuals

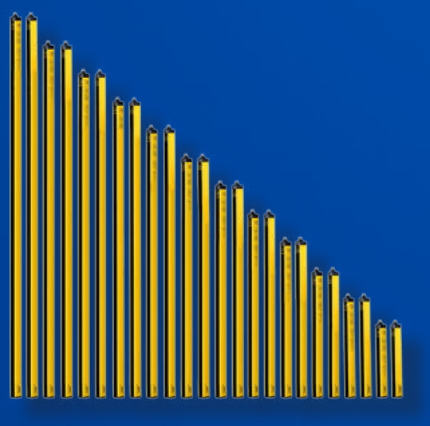

IP69K CE c UL us TÜV



## code description

LS4 ER / 30 - 015

| | | |
|---|---|---|
| series | LS4 | Type 4 safety light curtains 28 x 30 mm compact housing |
| E/R | ER | Emitter / Receiver couple |
| beams | 14 | Light grid, 14 mm resolution, finger protection |
| | 20 | Light grid, 20 mm resolution, hand protection |
| | 30 | Light grid, 30 mm resolution, hand protection |
| | 40 | Light grid, 40 mm resolution, hand protection |
| | 50 | Light grid, 50 mm resolution, presence control |
| | 90 | Light grid, 90 mm resolution, presence control |
| | 0A | 2 beams; body protection, 500 mm resolution |
| | 0B | 3 beams; body protection, 400 mm resolution |
| | 0C | 4 beams; body protection, 300 mm resolution |
| area | 015 ÷ 180 | Protected height from 150 to 1,800 mm (light grids) |
| | 050 ÷ 090 | Protected height 500, 800, 900 mm (multiple light beams) |
| model | | Standard model with selectable MANUAL/AUTOMATIC Restart and EDM functions |
| | B | Base model with integrated AUTOMATIC Restart |
| | M | Master Model with selectable functions |
| | S | Intermediate Slave model |
| | F | Final Slave model |
| distance | | Controlled distance |
| | L | Extended range |
| models | | IP65 and IP67 protection, 10° ... 55 °C operating temperature |
| | K | Models in transparent cylindrical housing, IP69K, suitable for applications in the food industry. Resistance to washing with water at 100 bar, 80 ° C Housing in PMMA, caps in POM C with silicone seals. Brackets in stainless steel AISI 316L. Operating temperature -10 ... 55 ° C |
| | H | Models in transparent cylindrical casing, IP69K protection, thermostated, suitable for applications in the food industry. Resistance to washing with water at 100 bar, 80 ° C Housing in PMMA, POM C caps and silicone seals. Brackets in stainless steel AISI 316L. Operating temperature -25 ... 55 ° C |

## available models

14 mm resolution; 0...3 / 1...6 m controlled distance

| protected height (mm) | n° of beams | response time (ms) | series |
|---|---|---|---|
| 144 | 15 | 4 | LS4ER/14-015B |
| | | | LS4ER/14-015 |
| | | | LS4ER/14-015F |
| 294 | 30 | 5.5 | LS4ER/14-030B |
| | | | LS4ER/14-030 |
| | | | LS4ER/14-030M |
| | | | LS4ER/14-030F |
| | | | LS4ER/14-030S |
| 444 | 45 | 7.5 | LS4ER/14-045B |
| | | | LS4ER/14-045 |
| | | | LS4ER/14-045M |
| | | | LS4ER/14-045F |
| | | | LS4ER/14-045S |
| 594 | 60 | 9 | LS4ER/14-060B |
| | | | LS4ER/14-060 |
| | | | LS4ER/14-060M |
| | | | LS4ER/14-060F |
| | | | LS4ER/14-060S |
| 744 | 75 | 11 | LS4ER/14-075B |
| | | | LS4ER/14-075 |
| | | | LS4ER/14-075M |
| | | | LS4ER/14-075F |
| | | | LS4ER/14-075S |
| 894 | 90 | 13 | LS4ER/14-090B |
| | | | LS4ER/14-090 |
| | | | LS4ER/14-090M |
| | | | LS4ER/14-090F |
| | | | LS4ER/14-090S |
| 1,044 | 105 | 14.5 | LS4ER/14-105B |
| | | | LS4ER/14-105 |
| | | | LS4ER/14-105M |
| | | | LS4ER/14-105F |
| | | | LS4ER/14-105S |
| 1,194 | 120 | 16.5 | LS4ER/14-120B |
| | | | LS4ER/14-120 |
| | | | LS4ER/14-120M |
| | | | LS4ER/14-120F |
| | | | LS4ER/14-120S |
| 1,344 | 135 | 18 | LS4ER/14-135B |
| | | | LS4ER/14-135 |
| | | | LS4ER/14-135M |
| | | | LS4ER/14-135F |
| | | | LS4ER/14-135S |
| 1,494 | 150 | 20 | LS4ER/14-150B |
| | | | LS4ER/14-150 |
| | | | LS4ER/14-150M |
| | | | LS4ER/14-150F |
| | | | LS4ER/14-150S |

## available models

20 mm resolution; 0...10 / 3...20 m controlled distance

| protected height (mm) | n° of beams | response time (ms) | series |
|---|---|---|---|
| 144 | 15 | 4 | LS4ER/20-015BL |
| | | | LS4ER/20-015BL |
| 294 | 30 | 5.5 | LS4ER/20-030BL |
| | | | LS4ER/20-030L |
| 444 | 45 | 7.5 | LS4ER/20-045BL |
| | | | LS4ER/20-045L |
| 594 | 60 | 9 | LS4ER/20-060BL |
| | | | LS4ER/20-060L |
| 744 | 75 | 11 | LS4ER/20-075BL |
| | | | LS4ER/20-075L |
| 894 | 90 | 13 | LS4ER/20-090BL |
| | | | LS4ER/20-090L |
| 1,044 | 105 | 14.5 | LS4ER/20-105BL |
| | | | LS4ER/20-105L |
| 1,194 | 120 | 16.5 | LS4ER/120BL |
| | | | LS4ER/120L |
| 1,344 | 135 | 18 | LS4ER/135BL |
| | | | LS4ER/135L |
| 1,494 | 150 | 20 | LS4ER/150BL |
| | | | LS4ER/150L |

## available models

30 mm resolution; 0...4 / 0...12 m controlled distance

| protected height (mm) | n° of beams | response time (ms) | series |
|---|---|---|---|
| 160 | 8 | 4 | LS4ER/30-015B |
| | | | LS4ER/30-015 |
| | | | LS4ER/30-015F |
| 310 | 16 | 5.5 | LS4ER/30-030B |
| | | | LS4ER/30-030 |
| | | | LS4ER/30-030M |
| | | | LS4ER/30-030F |
| | | | LS4ER/30-030S |
| 460 | 23 | 7.5 | LS4ER/30-045B |
| | | | LS4ER/30-045 |
| | | | LS4ER/30-045M |
| | | | LS4ER/30-045F |
| | | | LS4ER/30-045S |
| 610 | 31 | 9 | LS4ER/30-060B |
| | | | LS4ER/30-060 |
| | | | LS4ER/30-060M |
| | | | LS4ER/30-060F |
| | | | LS4ER/30-060S |
| 760 | 38 | 10.5 | LS4ER/30-075B |
| | | | LS4ER/30-075 |
| | | | LS4ER/30-075M |
| | | | LS4ER/30-075F |
| | | | LS4ER/30-075S |
| 910 | 46 | 12.5 | LS4ER/30-090B |
| | | | LS4ER/30-090 |
| | | | LS4ER/30-090M |
| | | | LS4ER/30-090F |
| | | | LS4ER/30-090S |
| 1,060 | 53 | 14 | LS4ER/30-105B |
| | | | LS4ER/30-105 |
| | | | LS4ER/30-105M |
| | | | LS4ER/30-105F |
| | | | LS4ER/30-105S |
| 1,210 | 61 | 15.5 | LS4ER/30-120B |
| | | | LS4ER/30-120 |
| | | | LS4ER/30-120M |
| | | | LS4ER/30-120F |
| | | | LS4ER/30-120S |
| 1,360 | 68 | 17 | LS4ER/30-135B |
| | | | LS4ER/30-135 |
| | | | LS4ER/30-135M |
| | | | LS4ER/30-135F |
| | | | LS4ER/30-135S |
| 1,510 | 76 | 19 | LS4ER/30-150B |
| | | | LS4ER/30-150 |
| | | | LS4ER/30-150M |
| | | | LS4ER/30-150F |
| | | | LS4ER/30-150S |
| 1,660 | 83 | 20.5 | LS4ER/30-165 |
| 1,810 | 91 | 22 | LS4ER/30-180 |

## available models

30 mm resolution; 0...10 / 0...20 m controlled distance

| protected height (mm) | n° of beams | response time (ms) | series |
|---|---|---|---|
| 160 | 8 | 3 | LS4ER/30-015BL |
| | | | LS4ER/30-015L |
| 310 | 16 | 4 | LS4ER/30-030BL |
| | | | LS4ER/30-030L |
| 460 | 23 | 5 | LS4ER/30-045BL |
| | | | LS4ER/30-045L |
| 610 | 31 | 6 | LS4ER/30-060BL |
| | | | LS4ER/30-060L |
| 760 | 38 | 6.5 | LS4ER/30-075BL |
| | | | LS4ER/30-075L |
| 910 | 46 | 7.5 | LS4ER/30-090BL |
| | | | LS4ER/30-090L |
| 1,060 | 53 | 8.5 | LS4ER/30-105BL |
| | | | LS4ER/30-105L |
| 1,210 | 61 | 9.5 | LS4ER/30-120BL |
| | | | LS4ER/30-120L |
| 1,360 | 68 | 10 | LS4ER/30-135BL |
| | | | LS4ER/30-135L |
| 1,510 | 76 | 11 | LS4ER/30-150BL |
| | | | LS4ER/30-150L |
| 1,660 | 83 | 12 | LS4ER/30-165L |
| 1,810 | 91 | 13 | LS4ER/30-180L |

## available models

40 mm; 0...4 / 0...12 m controlled distance

| protected height (mm) | n° of beams | response time (ms) | series |
|---|---|---|---|
| 160 | 6 | 3.5 | LS4ER/40-015B |
| | | | LS4ER/40-015 |
| | | | LS4ER/40-015M |
| | | | LS4ER/40-015F |
| | | | LS4ER/40-015S |
| 310 | 11 | 4.5 | LS4ER/40-030B |
| | | | LS4ER/40-030 |
| | | | LS4ER/40-030M |
| | | | LS4ER/40-030F |
| | | | LS4ER/40-030S |
| 460 | 16 | 5.5 | LS4ER/40-045B |
| | | | LS4ER/40-045 |
| | | | LS4ER/40-045M |
| | | | LS4ER/40-045F |
| | | | LS4ER/40-045S |

## available models

40 mm resolution; 0...4 / 0...12 m controlled distance

| protected height (mm) | n° of beams | response time (ms) | series |
|---|---|---|---|
| 610 | 21 | 7 | LS4ER/40-060B |
| | | | LS4ER/40-060 |
| | | | LS4ER/40-060M |
| | | | LS4ER/40-060F |
| | | | LS4ER/40-060S |
| 760 | 26 | 8 | LS4ER/40-075B |
| | | | LS4ER/40-075 |
| | | | LS4ER/40-075M |
| | | | LS4ER/40-075F |
| | | | LS4ER/40-075S |
| 910 | 31 | 9 | LS4ER/40-090B |
| | | | LS4ER/40-090 |
| | | | LS4ER/40-090M |
| | | | LS4ER/40-090F |
| | | | LS4ER/40-090S |
| 1,060 | 36 | 10 | LS4ER/40-105B |
| | | | LS4ER/40-105 |
| | | | LS4ER/40-105M |
| | | | LS4ER/40-105F |
| | | | LS4ER/40-105S |
| 1,210 | 41 | 11 | LS4ER/40-120B |
| | | | LS4ER/40-120 |
| | | | LS4ER/40-120M |
| | | | LS4ER/40-120F |
| | | | LS4ER/40-120S |
| 1,360 | 46 | 12.5 | LS4ER/40-135B |
| | | | LS4ER/40-135 |
| | | | LS4ER/40-135M |
| | | | LS4ER/40-135F |
| | | | LS4ER/40-135S |
| 1,510 | 51 | 13.5 | LS4ER/40-150B |
| | | | LS4ER/40-150 |
| | | | LS4ER/40-150M |
| | | | LS4ER/40-150F |
| | | | LS4ER/40-150S |

## available models

40 mm resolution; 0...10 / 3...20 m controlled distance

| protected height (mm) | n° of beams | response time (ms) | series |
|---|---|---|---|
| 160 | 6 | 3 | LS4ER/40-015BL |
| | | | LS4ER/40-015L |
| 310 | 11 | 3.5 | LS4ER/40-030BL |
| | | | LS4ER/40-030L |
| 460 | 16 | 4 | LS4ER/40-045BL |
| | | | LS4ER/40-045L |
| 610 | 21 | 4.5 | LS4ER/40-060BL |
| | | | LS4ER/40-060L |
| 760 | 26 | 5 | LS4ER/40-075BL |
| | | | LS4ER/40-075L |
| 910 | 31 | 6 | LS4ER/40-090BL |
| | | | LS4ER/40-090L |
| 1,060 | 36 | 6.5 | LS4ER/40-105BL |
| | | | LS4ER/40-105L |
| 1,210 | 41 | 7 | LS4ER/40-120BL |
| | | | LS4ER/40-120L |
| 1,360 | 46 | 7.5 | LS4ER/40-135BL |
| | | | LS4ER/40-135L |
| 1,510 | 51 | 8 | LS4ER/40-150BL |
| | | | LS4ER/40-150L |

## available models

50 mm resolution; 0...4 / 0...12 m controlled distance

| protected height (mm) | n° of beams | response time (ms) | series |
|---|---|---|---|
| 160 | 4 | 3 | LS4ER/50-015B |
| | | | LS4ER/50-015 |
| | | | LS4ER/50-015M |
| | | | LS4ER/50-015F |
| | | | LS4ER/50-015S |
| 310 | 8 | 4 | LS4ER/50-030B |
| | | | LS4ER/50-030 |
| | | | LS4ER/50-030M |
| | | | LS4ER/50-030F |
| | | | LS4ER/50-030S |

## available models

50 mm resolution; 0...4 / 0...12 m controlled distance

| protected height (mm) | n° of beams | response time (ms) | series |
|---|---|---|---|
| 460 | 12 | 4.5 | LS4ER/50-045B |
| | | | LS4ER/50-045 |
| | | | LS4ER/50-045M |
| | | | LS4ER/50-045F |
| | | | LS4ER/50-045S |
| 610 | 16 | 5.5 | LS4ER/50-060B |
| | | | LS4ER/50-060 |
| | | | LS4ER/50-060M |
| | | | LS4ER/50-060F |
| | | | LS4ER/50-060S |
| 760 | 20 | 6.5 | LS4ER/50-075B |
| | | | LS4ER/50-075 |
| | | | LS4ER/50-075M |
| | | | LS4ER/50-075F |
| | | | LS4ER/50-075S |
| 910 | 24 | 7.5 | LS4ER/50-090B |
| | | | LS4ER/50-090 |
| | | | LS4ER/50-090M |
| | | | LS4ER/50-090F |
| | | | LS4ER/50-090S |
| 1,060 | 28 | 8.5 | LS4ER/50-105B |
| | | | LS4ER/50-105 |
| | | | LS4ER/50-105M |
| | | | LS4ER/50-105F |
| | | | LS4ER/50-105S |
| 1,210 | 32 | 9.5 | LS4ER/50-120B |
| | | | LS4ER/50-120 |
| | | | LS4ER/50-120M |
| | | | LS4ER/50-120F |
| | | | LS4ER/50-120S |
| 1,360 | 36 | 10 | LS4ER/50-135B |
| | | | LS4ER/50-135 |
| | | | LS4ER/50-135M |
| | | | LS4ER/50-135F |
| | | | LS4ER/50-135S |
| 1,510 | 40 | 11 | LS4ER/50-150B |
| | | | LS4ER/50-150 |
| | | | LS4ER/50-150M |
| | | | LS4ER/50-150F |
| | | | LS4ER/50-150S |

## available models

50 mm resolution; 0...10 / 3...20 m controlled distance

| protected height (mm) | n° of beams | response time (ms) | series |
|---|---|---|---|
| 160 | 4 | 2.5 | LS4ER/50-015BL |
| | | | LS4ER/50-015L |
| 310 | 8 | 3 | LS4ER/50-030BL |
| | | | LS4ER/50-030L |
| 460 | 12 | 3.5 | LS4ER/50-045BL |
| | | | LS4ER/50-045L |
| 610 | 16 | 4 | LS4ER/50-060BL |
| | | | LS4ER/50-060L |
| 760 | 20 | 4.5 | LS4ER/50-075BL |
| | | | LS4ER/50-075L |
| 910 | 24 | 5 | LS4ER/50-090BL |
| | | | LS4ER/50-090L |
| 1,060 | 28 | 5.5 | LS4ER/50-105BL |
| | | | LS4ER/50-105L |
| 1,210 | 32 | 6 | LS4ER/50-120BL |
| | | | LS4ER/50-120L |
| 1,360 | 36 | 6.5 | LS4ER/50-135BL |
| | | | LS4ER/50-135L |
| 1,510 | 40 | 7 | LS4ER/50-150BL |
| | | | LS4ER/50-150L |

## available models

90 mm resolution; 0...4 / 0...12 m controlled distance

| protected height (mm) | n° of beams | response time (ms) | series |
|---|---|---|---|
| 310 | 4 | 3 | LS4ER/90-030B |
| | | | LS4ER/90-030 |
| | | | LS4ER/90-030M |
| | | | LS4ER/90-030F |
| | | | LS4ER/90-030S |
| 460 | 6 | 3.5 | LS4ER/90-045B |
| | | | LS4ER/90-045 |
| | | | LS4ER/90-045M |
| | | | LS4ER/90-045F |
| | | | LS4ER/90-045S |
| 610 | 8 | 4 | LS4ER/90-060B |
| | | | LS4ER/90-060 |
| | | | LS4ER/90-060M |
| | | | LS4ER/90-060F |
| | | | LS4ER/90-060S |

## available models

90 mm resolution; 0...4 / 0...12 m controlled distance

| protected height (mm) | n° of beams | response time (ms) | series |
|---|---|---|---|
| 760 | 10 | 4.5 | LS4ER/90-075B |
| | | | LS4ER/90-075 |
| | | | LS4ER/90-075M |
| | | | LS4ER/90-075F |
| | | | LS4ER/90-075S |
| 910 | 12 | 5 | LS4ER/90-090B |
| | | | LS4ER/90-090 |
| | | | LS4ER/90-090M |
| | | | LS4ER/90-090F |
| | | | LS4ER/90-090S |
| 1,060 | 14 | 5.5 | LS4ER/90-105B |
| | | | LS4ER/90-105 |
| | | | LS4ER/90-105M |
| | | | LS4ER/90-105F |
| | | | LS4ER/90-105S |
| 1,210 | 16 | 5.5 | LS4ER/90-120B |
| | | | LS4ER/90-120 |
| | | | LS4ER/90-120M |
| | | | LS4ER/90-120F |
| | | | LS4ER/90-120S |
| 1,360 | 18 | 6 | LS4ER/90-135B |
| | | | LS4ER/90-135 |
| | | | LS4ER/90-135M |
| | | | LS4ER/90-135F |
| | | | LS4ER/90-135S |
| 1,510 | 20 | 6.5 | LS4ER/90-150B |
| | | | LS4ER/90-150 |
| | | | LS4ER/90-150M |
| | | | LS4ER/90-150F |
| | | | LS4ER/90-150S |

## available models

90 mm resolution; 0...10 / 3...20 m controlled distance

| protected height (mm) | n° of beams | response time (ms) | series |
|---|---|---|---|
| 310 | 4 | 2.5 | LS4ER/90-030BL |
| | | | LS4ER/90-030L |
| 460 | 6 | 3 | LS4ER/90-045BL |
| | | | LS4ER/90-045L |
| 610 | 8 | 3 | LS4ER/90-060BL |
| | | | LS4ER/90-060L |
| 760 | 10 | 3.5 | LS4ER/90-075BL |
| | | | LS4ER/90-075L |
| 910 | 12 | 3.5 | LS4ER/90-090BL |
| | | | LS4ER/90-090L |
| 1,060 | 14 | 3.5 | LS4ER/90-105BL |
| | | | LS4ER/90-105L |
| 1,210 | 16 | 4 | LS4ER/90-120BL |
| | | | LS4ER/90-120L |
| 1,360 | 18 | 4 | LS4ER/90-135BL |
| | | | LS4ER/90-135L |
| 1,510 | 20 | 4.5 | LS4ER/90-150BL |
| | | | LS4ER/90-150L |

## available models

resolution 2,3,4 beams; 0...4 / 0...12 m controlled distance

| protected height (mm) | n° of beams | distance betw. beams (mm) | response time (ms) | series |
|---|---|---|---|---|
| 510 | 2 | 500 | 2.5 | LS4ER/0A-050B |
| | | | | LS4ER/0A-050 |
| | | | | LS4ER/0A-050M |
| | | | | LS4ER/0A-050F |
| | | | | LS4ER/0A-050S |
| 810 | 3 | 800 | 3 | LS4ER/0B-080B |
| | | | | LS4ER/0B-080 |
| | | | | LS4ER/0B-080M |
| | | | | LS4ER/0B-080F |
| | | | | LS4ER/0B-080S |
| 910 | 4 | 900 | 3 | LS4ER/0C-090B |
| | | | | LS4ER/0C-090 |
| | | | | LS4ER/0C-090M |
| | | | | LS4ER/0C-090F |
| | | | | LS4ER/0C-090S |

## available models

resolution 2,3,4 beams; 0...10 / 3...20 m controlled distance

| protected height (mm) | n° of beams | distance betw. beams (mm) | response time (ms) | series |
|---|---|---|---|---|
| 510 | 2 | 500 | 2.5 | LS4ER/0A-050BL |
| | | | | LS4ER/0A-050L |
| 810 | 3 | 800 | 2.5 | LS4ER/0B-080BL |
| | | | | LS4ER/0B-080L |
| 910 | 4 | 900 | 2.5 | LS4ER/0C-090BL |
| | | | | LS4ER/0C-090L |

## available models

14 mm resolution; 0...3 / 1...5 m controlled distance

| protected height (mm) | n° of beams | response time (ms) | series |
|---|---|---|---|
| 144 | 15 | 4 | LS4ER/14-015K |
| 294 | 30 | 5.5 | LS4ER/14-030K |
| 444 | 45 | 7.5 | LS4ER/14-045K |
| 594 | 60 | 9 | LS4ER/14-060K |
| 744 | 75 | 11 | LS4ER/14-075K |
| 894 | 90 | 13 | LS4ER/14-090K |
| 1,044 | 105 | 14.5 | LS4ER/14-105K |
| 1,194 | 120 | 16.5 | LS4ER/14-120K |
| 1,344 | 135 | 18 | LS4ER/14-135K |
| 1,494 | 150 | 20 | LS4ER/14-150K |

## available models

30 mm resolution; 0...8 / 3...17 m controlled distance

| protected height (mm) | n° of beams | response time (ms) | series |
|---|---|---|---|
| 160 | 8 | 3 | LS4ER/30-015LK |
| 310 | 16 | 4 | LS4ER/30-030LK |
| 460 | 23 | 5 | LS4ER/30-045LK |
| 610 | 31 | 6 | LS4ER/30-060LK |
| 760 | 38 | 6.5 | LS4ER/30-075LK |
| 910 | 46 | 7.5 | LS4ER/30-090LK |
| 1,060 | 53 | 8.5 | LS4ER/30-105LK |
| 1,210 | 61 | 9.5 | LS4ER/30-120LK |
| 1,360 | 68 | 10 | LS4ER/30-135LK |
| 1,510 | 76 | 11 | LS4ER/30-150LK |

## available models

14 mm resolution; 0...3 / 1...5 m controlled distance

| protected height (mm) | n° of beams | response time (ms) | series |
|---|---|---|---|
| 144 | 15 | 4 | LS4ER/14-015H |
| 294 | 30 | 5.5 | LS4ER/14-030H |
| 444 | 45 | 7.5 | LS4ER/14-045H |
| 594 | 60 | 9 | LS4ER/14-060H |
| 744 | 75 | 11 | LS4ER/14-075H |
| 894 | 90 | 13 | LS4ER/14-090H |
| 1,044 | 105 | 14.5 | LS4ER/14-105H |
| 1,194 | 120 | 16.5 | LS4ER/14-120H |
| 1,344 | 135 | 18 | LS4ER/14-135H |
| 1,494 | 150 | 20 | LS4ER/14-150H |

## available models

30 mm resolution; 0...8 / 3...17 m controlled distance

| protected height (mm) | n° of beams | response time (ms) | serie |
|---|---|---|---|
| 160 | 8 | 3 | LS4ER/30-015LH |
| 310 | 16 | 4 | LS4ER/30-030LH |
| 460 | 23 | 5 | LS4ER/30-045LH |
| 610 | 31 | 6 | LS4ER/30-060LH |
| 760 | 38 | 6.5 | LS4ER/30-075LH |
| 910 | 46 | 7.5 | LS4ER/30-090LH |
| 1,060 | 53 | 8.5 | LS4ER/30-105LH |
| 1,210 | 61 | 9.5 | LS4ER/30-120LH |
| 1,360 | 68 | 10 | LS4ER/30-135LH |
| 1,510 | 76 | 11 | LS4ER/30-150LH |

## available models

resolution 2,3,4 beams; 0...10 / 3...17 m controlled distance

| protected height (mm) | n° of beams | response time (ms) | series |
|---|---|---|---|
| 510 | 2 | 2.5 | LS4ER/0A-050LK |
| 810 | 3 | | LS4ER/0B-080LK |
| 910 | 4 | | LS4ER/0C-090LK |

## available models

resolution 2,3,4 beams; 0...10 / 3...17 m controlled distance

| protected height (mm) | n° of beams | response time (ms) | series |
|---|---|---|---|
| 510 | 2 | 2.5 | LS4ER/0A-050LH |
| 810 | 3 | | LS4ER/0B-080LH |
| 910 | 4 | | LS4ER/0C-090LH |

# technical specifications

| | LS4ER/**-***_ | |
|---|---|---|
| operating voltage | 19.2...28.8 | PELV power supplier according to EN 60204-1 Cap. 6.4 |
| power consumption, Receiver | 2 W | no load |
| power consumption, Emitter | 1 W | |
| power consumption, heater | 2...10 W | H models, IP69K with heater |
| output type | 2 x PNP | OSSD safety outputs |
| output current | 400 mA | higher values are considered overload |
| equivalent resistive load | 60 Ω | lower values are considered short circuit |
| capacitive load | 0.82 µF | lower values may be considered short circuit |
| recovery time | 2 s | |
| response time | 2.5...20 ms | |
| effective aperture angle | ≤ ± 2.5° | IEC 61496-1 |
| artificial light rejection | according to IEC 61496-2 | according to the reported standards |
| ambient light rejection | according to IEC 61496-2 | |
| IP mechanical protection (standard models) | IP65 e IP67 | without any additional precaution the device can't be used for outdoor applications |
| IP mechanical protection (special models) | IP65, IP67 and IP69K | external transparent tube resistant against 100 bar water jets |
| operating temperature | -10...+55°C | no condensation |
| operating temperature, K models | -10...+55°C | no condensation, models without internal heater |
| operating temperature, H models | -25...+55°C | models with internal heater |
| storage temperature | -25...+70°C | to be respected also during transportation |
| humidity | 95% | no condensation |
| vibrations | according to IEC 61496-1 | according to the reported standards |
| shocks | according to IEC 61496-1 | |
| cable length (power supply/outputs) | 100 m | cable section 0.34 mm² (to respect max length) |
| max cable legth for Master Slave interconnections | 50 m | |
| dimension (IP67 models) | 28 (front) x 30 mm | painted aluminium RAL 1012 |
| tube (IP69K models) | ø 56 mm | |
| connectors models LS4ER/**-***B | Emitter 1 x M12, 5p, male<br>Receiver 1 x M12, 5p male | nichel plated brass |
| connectors models LS4ER/**-*** | Emitter 1 x M12, 5p, male<br>Receiver 1 x M12, 8p male | |
| connectors models LS4ER/**-***M | Emitter 2 x M12, 5p, male<br>Receiver 1 x M12, 8p male<br>+ 1 x M12, 5p male | |
| connectors models LS4ER/**-***S | Emitter 2 x M12, 5p, male<br>Receiver 2 x M12, 5p male | |
| connectors models LS4ER/**-***F | Emitter 1 x M12, 5p, male<br>Receiver 1 x M12, 5p male | |
| connectors models LS4ER/**-***K | Emitter 5 wires<br>Receiver 8 wires | PVC sheath, ø 5.5 mm L 10 m, 0.34 mm² |
| connectors models LS4ER/**-***H | Emitter 8 wires<br>Receiver10 wires | |

## safety parameters

| LS4ER/14-***_ | 015 | 030 | 045 | 060 | 075 | 090 | 105 | 120 | 135 | 150 |
|---|---|---|---|---|---|---|---|---|---|---|
| height (mm) | 160 | 310 | 460 | 610 | 760 | 910 | 1,060 | 1,210 | 1,360 | 1,510 |
| number of beams | 15 | 30 | 45 | 60 | 75 | 90 | 105 | 120 | 135 | 150 |
| response time (ms) | 4 | 5.5 | 7.5 | 9 | 11 | 13 | 14.5 | 16.5 | 18 | 20 |
| response time Master + Slave (ms) | Ttot = [0.06 * (Nr Slave1 + Nr Master) + 0.9636] * 2 (Master + 1 Slave) | | | | | | | | | |
| response time Master + 2 Slave (ms) | Ttot = [0.06 * (Nr Slave1 + Nr Slave2 + Nr Master) + 1.0036] * 2 (Master + 2 Slave) | | | | | | | | | |
| Type (1) | 4 | | | | | | | | | |
| SIL(2) | 3 | | | | | | | | | |
| SILCL (3) | 3 | | | | | | | | | |
| PL (4) | e | | | | | | | | | |
| PFHd | 1.03E-08 | 1.27E-08 | 1.52E-08 | 1.75E-08 | 2.00E-08 | 2.24E-08 | 2.49E-08 | 2.73E-08 | 2.98E-08 | 3.22E-08 |
| DCavg | 95.40% | 94.90% | 94.50% | 94.10% | 93.80% | 93.60% | 93.30% | 93.10% | 92.90% | 92.80% |
| MTTFd | 100 | | | | | | | | | |
| CFF | 80% | | | | | | | | | |

| LS4ER/30-***_ | 015 | 030 | 045 | 060 | 075 | 090 | 105 | 120 | 135 | 150 | 165 | 180 |
|---|---|---|---|---|---|---|---|---|---|---|---|---|
| height (mm) | 160 | 310 | 460 | 610 | 760 | 910 | 1,060 | 1,210 | 1,360 | 1,510 | 1,660 | 1,810 |
| number of beams | 8 | 16 | 23 | 31 | 38 | 46 | 53 | 61 | 68 | 76 | 83 | 91 |
| response time (ms) | 4 | 5.5 | 7.5 | 9 | 10.5 | 12.5 | 14 | 15.5 | 17 | 19 | 20.5 | 22 |
| response time Master + Slave (ms) | Ttot = [0.11 * (Nr Slave1 + Nr Master) + 0.9376] * 2 (Master + 1 Slave) | | | | | | | | | | | |
| response time Master + 2 Slave (ms) | Ttot = [0.11 * (Nr Slave1 + Nr Slave2 + Nr Master) + 1.0508] * 2 (Master + 2 Slave) | | | | | | | | | | | |
| Type (1) | 4 | | | | | | | | | | | |
| SIL(2) | 3 | | | | | | | | | | | |
| SILCL (3) | 3 | | | | | | | | | | | |
| PL (4) | e | | | | | | | | | | | |
| PFHd | 7.08E-09 | 8.20E-09 | 9.45E-09 | 1.06E-08 | 1.19E-08 | 1.30E-08 | 1.43E-08 | 1.54E-08 | 1.67E-08 | 1.78E-08 | 1.90E-08 | 2.02E-08 |
| DCavg | 96.60% | 97.00% | 97.20% | 97.30% | 97.40% | 97.50% | 97.70% | 97.60% | 97.70% | 97.70% | 97.70% | 97.80% |
| MTTFd | 100 | | | | | | | | | | | |
| CFF | 80% | | | | | | | | | | | |

| LS4ER/40-***_ | 015 | 030 | 045 | 060 | 075 | 090 | 105 | 120 | 135 | 150 |
|---|---|---|---|---|---|---|---|---|---|---|
| height (mm) | 160 | 310 | 460 | 610 | 760 | 910 | 1,060 | 1,210 | 1,360 | 1,510 |
| number of beams | 6 | 11 | 16 | 21 | 26 | 31 | 36 | 41 | 46 | 51 |
| response time (ms) | 3.5 | 4.5 | 5.5 | 7 | 8 | 9 | 10 | 11 | 12.5 | 13.5 |
| response time Master + Slave (ms) | Ttot = [0.11 * (Nr Slave1 + Nr Master) + 0.9376] * 2 (Master + 1 Slave) | | | | | | | | | |
| response time Master + 2 Slave (ms) | Ttot = [0.11 * (Nr Slave1 + Nr Slave2 + Nr Master) + 1.0508] * 2 (Master + 2 Slave) | | | | | | | | | |
| Type (1) | 4 | | | | | | | | | |
| SIL(2) | 3 | | | | | | | | | |
| SILCL (3) | 3 | | | | | | | | | |
| PL (4) | e | | | | | | | | | |
| PFHd | 6.82E-09 | 7.76E-09 | 8.58E-09 | 9.52E-09 | 1.03E-08 | 1.13E-08 | 1.21E-08 | 1.30E-08 | 1.38E-08 | 1.48E-08 |
| DCavg | 96.40% | 96.70% | 96.90% | 97.10% | 97.20% | 97.30% | 97.40% | 97.40% | 97.50% | 97.50% |
| MTTFd | 100 | | | | | | | | | |
| CFF | 80% | | | | | | | | | |

(1) ref. CEI EN 61496-1; CEI EN 61496-2 (2) ref. CEI EN 61508 (3) ref. CEI EN 62061 + CEI EN 62061/EC2 (4) ref. UNI EN ISO 13849-1

## safety parameters

| LS4ER/50-***_ | 015 | 030 | 045 | 060 | 075 | 090 | 105 | 120 | 135 | 150 |
|---|---|---|---|---|---|---|---|---|---|---|
| height (mm) | 160 | 310 | 460 | 610 | 760 | 910 | 1,060 | 1,210 | 1,360 | 1,510 |
| number of beams | 4 | 8 | 12 | 16 | 20 | 24 | 28 | 32 | 36 | 40 |
| response time (ms) | 3 | 4 | 4.5 | 5.5 | 6.5 | 7.5 | 8.5 | 9 | 10 | 11 |
| response time Master + Slave (ms) | Ttot = [0.11 * (Nr Slave1 + Nr Master) + 0.9376] * 2 (Master + 1 Slave) | | | | | | | | | |
| response time Master + 2 Slave (ms) | Ttot = [0.11 * (Nr Slave1 + Nr Slave2 + Nr Master) + 1.0508] * 2 (Master + 2 Slave) | | | | | | | | | |
| Type (1) | 4 | | | | | | | | | |
| SIL(2) | 3 | | | | | | | | | |
| SILCL (3) | 3 | | | | | | | | | |
| PL (4) | e | | | | | | | | | |
| PFHd | 6.53E-09 | 7.16E-09 | 7.85E-09 | 8.48E-09 | 9.17E-08 | 9.80E-08 | 1.05E-08 | 1.11E-08 | 1.18E-08 | 1.24E-08 |
| DCavg | 96.50% | 96.80% | 96.90% | 97.10% | 97.20% | 97.30% | 97.40% | 97.50% | 97.50% | 97.50% |
| MTTFd | 100 | | | | | | | | | |
| CFF | 80% | | | | | | | | | |

| LS4ER/90-***_ | 030 | 045 | 060 | 075 | 090 | 105 | 120 | 135 | 150 |
|---|---|---|---|---|---|---|---|---|---|
| height (mm) | 310 | 460 | 610 | 760 | 910 | 1,060 | 1,210 | 1,360 | 1,510 |
| number of beams | 4 | 6 | 8 | 10 | 10 | 12 | 14 | 16 | 20 |
| response time (ms) | 3 | 3.5 | 4 | 4.5 | 4.5 | 5 | 5.5 | 5.5 | 6.5 |
| response time Master + Slave (ms) | Ttot = [0.11 * (Nr Slave1 + Nr Master) + 0.9376] * 2 (Master + 1 Slave) | | | | | | | | |
| response time Master + 2 Slave (ms) | Ttot = [0.11 * (Nr Slave1 + Nr Slave2 + Nr Master) + 1.0508] * 2 (Master + 2 Slave) | | | | | | | | |
| Type (1) | 4 | | | | | | | | |
| SIL(2) | 3 | | | | | | | | |
| SILCL (3) | 3 | | | | | | | | |
| PL (4) | e | | | | | | | | |
| PFHd | 6.79E-09 | 7.16E-09 | 7.85E-09 | 8,48E-09 | 9,17E-08 | 9,80E-08 | 1,05E-08 | 1,11E-08 | 1,18E-08 |
| DCavg | 96.50% | 96.60% | 96.70% | 96.80% | 96.90% | 96.90% | 97.00% | 97.10% | 97.10% |
| MTTFd | 100 | | | | | | | | |
| CFF | 80% | | | | | | | | |

| LS4ER/**-***_ | 0A-050 | 0B-080 | 0C-090 |
|---|---|---|---|
| height (mm) | 500 | 800 | 900 |
| number of beams | 2 | 3 | 4 |
| response time (ms) | 2,5 | 3 | 3 |
| response time Master + Slave (ms) | Ttot = [0.11 * (Nr Slave1 + Nr Master) + 0.9376] * 2 (Master + 1 Slave) | | |
| response time Master + 2 Slave (ms) | Ttot = [0.11 * (Nr Slave1 + Nr Slave2 + Nr Master) + 1.0508] * 2 (Master + 2 Slave) | | |
| Type (1) | 4 | | |
| SIL(2) | 3 | | |
| SILCL (3) | 3 | | |
| PL (4) | e | | |
| PFHd | 6.89E-09 | 7.55E-08 | 8.21E-08 |
| DCavg | 96.20% | 96.20% | 96.10% |
| MTTFd | 100 | | |
| CFF | 80% | | |

(1) ref. CEI EN 61496-1; CEI EN 61496-2 (2) ref. CEI EN 61508 (3) ref. CEI EN 62061 + CEI EN 62061/EC2 (4) ref. UNI EN ISO 13849-1

| LS4ER/20-***_L | 015 | 030 | 045 | 060 | 075 | 090 | 105 | 120 | 135 | 150 |
|---|---|---|---|---|---|---|---|---|---|---|
| height (mm) | 160 | 310 | 460 | 610 | 760 | 910 | 1,060 | 1,210 | 1,360 | 1,510 |
| number of beams | 15 | 30 | 45 | 60 | 75 | 90 | 105 | 120 | 135 | 150 |
| response time (ms) | 4 | 5.5 | 7.5 | 9 | 11 | 13 | 14.5 | 16.5 | 18 | 20 |
| response time Master + Slave (ms) | Ttot = [0.06 * (Nr Slave1 + Nr Master) + 0.9636] * 2 (Master + 1 Slave) | | | | | | | | | |
| response time Master + 2 Slave (ms) | Ttot = [0.06 * (Nr Slave1 + Nr Slave2 + Nr Master) + 1.0036] * 2 (Master + 2 Slave) | | | | | | | | | |
| Type [1] | 4 | | | | | | | | | |
| SIL [2] | 3 | | | | | | | | | |
| SILCL [3] | 3 | | | | | | | | | |
| PL [4] | e | | | | | | | | | |
| PFHd | 1.03E-08 | 1.27E-08 | 1.52E-08 | 1.75E-08 | 2.00E-08 | 2.24E-08 | 2.49E-08 | 2.73E-08 | 2.98E-08 | 3.22E-08 |
| DCavg | 95.40% | 94.90% | 94.50% | 94.10% | 93.80% | 93.60% | 93.30% | 93.10% | 92.90% | 92.80% |
| MTTFd | 100 | | | | | | | | | |
| CFF | 80% | | | | | | | | | |

| LS4ER/30-***_ | 015 | 030 | 045 | 060 | 075 | 090 | 105 | 120 | 135 | 150 | 165 | 180 |
|---|---|---|---|---|---|---|---|---|---|---|---|---|
| height (mm) | 160 | 310 | 460 | 610 | 760 | 910 | 1,060 | 1,210 | 1,360 | 1,510 | 1,660 | 1,810 |
| number of beams | 8 | 16 | 23 | 31 | 38 | 46 | 53 | 61 | 68 | 76 | 83 | 91 |
| response time (ms) | 3 | 4 | 5 | 6 | 6.5 | 7.5 | 8.5 | 9.5 | 10 | 11 | 12 | 13 |
| response time Master + Slave (ms) | Ttot = [0.06 * (Nr Slave1 + Nr Master) + 0.9636] * 2 (Master + 1 Slave) | | | | | | | | | | | |
| response time Master + 2 Slave (ms) | Ttot = [0.06 * (Nr Slave1 + Nr Slave2 + Nr Master) + 1.0036] * 2 (Master + 2 Slave) | | | | | | | | | | | |
| Type [1] | 4 | | | | | | | | | | | |
| SIL [2] | 3 | | | | | | | | | | | |
| SILCL [3] | 3 | | | | | | | | | | | |
| PL [4] | e | | | | | | | | | | | |
| PFHd | 9.13E-09 | 1.04E-08 | 1.16E-08 | 1.28E-08 | 1.41E-08 | 1.53E-08 | 1.66E-08 | 1.78E-08 | 1.91E-08 | 2.03E-08 | 2.16E-09 | 2.29E-08 |
| DCavg | 95.70% | 95.40% | 95.10% | 94.90% | 94.70% | 94.50% | 94.30% | 94.10% | 93.90% | 93.80% | 93.70% | 93.60% |
| MTTFd | 100 | | | | | | | | | | | |
| CFF | 80% | | | | | | | | | | | |

| LS4ER/40-***_L | 015 | 030 | 045 | 060 | 075 | 090 | 105 | 120 | 135 | 150 |
|---|---|---|---|---|---|---|---|---|---|---|
| height | 160 | 310 | 460 | 610 | 760 | 910 | 1,060 | 1,210 | 1,360 | 1,510 |
| number of beams | 6 | 11 | 16 | 21 | 26 | 31 | 36 | 41 | 46 | 51 |
| response time (ms) | 3 | 3,5 | 4 | 4.5 | 5 | 6 | 6.5 | 7 | 7.5 | 8 |
| response time Master + Slave (ms) | Ttot = [0.06 * (Nr Slave1 + Nr Master) + 0.9636] * 2 (Master + 1 Slave)) | | | | | | | | | |
| response time Master + 2 Slave (ms) | Ttot = [0.06 * (Nr Slave1 + Nr Slave2 + Nr Master) + 1.0036] * 2 (Master + 2 Slave) | | | | | | | | | |
| Type [1] | 4 | | | | | | | | | |
| SIL [2] | 3 | | | | | | | | | |
| SILCL [3] | 3 | | | | | | | | | |
| PL [4] | e | | | | | | | | | |
| PFHd | 8.84E-09 | 9.85E-09 | 1.06E-09 | 1.16E-09 | 1.23E-08 | 1.34E-08 | 1.41E-08 | 1.51E-08 | 1.59E-08 | 1.69E-08 |
| DCavg | 95.80% | 95.50% | 95.30% | 95.10% | 95.00% | 94.80% | 94.70% | 94.50% | 94.40% | 94.20% |
| MTTFd | 100 | | | | | | | | | |
| CFF | 80% | | | | | | | | | |

[1] ref. CEI EN 61496-1; CEI EN 61496-2 [2] ref. CEI EN 61508 [3] ref. CEI EN 62061 + CEI EN 62061/EC2 [4] ref. UNI EN ISO 13849-1

# safety parameters

| LS4ER/50-***_L | 015 | 030 | 045 | 060 | 075 | 090 | 105 | 120 | 135 | 150 |
|---|---|---|---|---|---|---|---|---|---|---|
| height (mm) | 160 | 310 | 460 | 610 | 760 | 910 | 1,060 | 1,210 | 1,360 | 1,510 |
| number of beams | 4 | 8 | 12 | 16 | 20 | 24 | 28 | 32 | 36 | 40 |
| response time (ms) | 2.5 | 3 | 3.5 | 4 | 4.5 | 5 | 5.5 | 6 | 6.5 | 7 |
| response time Master + Slave (ms) | Ttot = [0.06 * (Nr Slave1 + Nr Master) + 0.9636] * 2 (Master + 1 Slave)) | | | | | | | | | |
| response time Master + 2 Slave (ms) | Ttot = [0.06 * (Nr Slave1 + Nr Slave2 + Nr Master) + 1.0036] * 2 (Master + 2 Slave) | | | | | | | | | |
| Type [1] | 4 | | | | | | | | | |
| SIL [2] | 3 | | | | | | | | | |
| SILCL [3] | 3 | | | | | | | | | |
| PL [4] | e | | | | | | | | | |
| PFHd | 8.50E-09 | 9.11E-09 | 9.82E-09 | 1.4E-09 | 1.11E-08 | 1.18E-08 | 1.25E-08 | 1.31E-08 | 1.38E-08 | 1.44E-08 |
| DCavg | 95.90% | 95.70% | 95.50% | 95.40% | 95.20% | 95.10% | 94.90% | 94.80% | 94.70% | 94.60% |
| MTTFd | 100 | | | | | | | | | |
| CFF | 80% | | | | | | | | | |

| LS4ER/90-***_L | 030 | 045 | 060 | 075 | 090 | 105 | 120 | 135 | 150 |
|---|---|---|---|---|---|---|---|---|---|
| height (mm) | 310 | 460 | 610 | 760 | 910 | 1,060 | 1,210 | 1,360 | 1,510 |
| number of beams | 4 | 6 | 8 | 10 | 12 | 14 | 16 | 18 | 20 |
| response time (ms) | 2.5 | 3 | 3 | 3.5 | 3.5 | 3.5 | 4 | 4 | 4.5 |
| response time Master + Slave (ms) | Ttot = [0.06 * (Nr Slave1 + Nr Master) + 0.9636] * 2 (Master + 1 Slave)) | | | | | | | | |
| response time Master + 2 Slave (ms) | Ttot = [0.06 * (Nr Slave1 + Nr Slave2 + Nr Master) + 1.0036] * 2 (Master + 2 Slave) | | | | | | | | |
| Type [1] | 4 | | | | | | | | |
| SIL [2] | 3 | | | | | | | | |
| SILCL [3] | 3 | | | | | | | | |
| PL [4] | e | | | | | | | | |
| PFHd | 8.71E-09 | 9.23E-09 | 9.64E-09 | 1.02E-09 | 1.06E-08 | 1.11E-08 | 1.20E-08 | 1.31E-08 | 1.24E-08 |
| DCavg | 95.80% | 95.70% | 95.60% | 95.40% | 95.30% | 95.10% | 95.00% | 94.80% | 95.00% |
| MTTFd | 100 | | | | | | | | |
| CFF | 80% | | | | | | | | |

| LS4ER/**-***_L | 0A-050 | 0B-080 | 0C-090 |
|---|---|---|---|
| height (mm) | 500 | 800 | 900 |
| number of beams | 2 | 3 | 4 |
| response time (ms) | 2.5 | 2.5 | 2.5 |
| response time Master + Slave (ms) | Ttot = [0.06 * (Nr Slave1 + Nr Master) + 0.9636] * 2 (Master + 1 Slave) | | |
| response time Master + 2 Slave (ms) | Ttot = [0.06 * (Nr Slave1 + Nr Slave2 + Nr Master) + 1.0036] * 2 (Master + 2 Slave) | | |
| Type [1] | 4 | | |
| SIL [2] | 3 | | |
| SILCL [3] | 3 | | |
| PL [4] | e | | |
| PFHd | 9.15E-09 | 9.99E-09 | 1.08E-08 |
| DCavg | 95.80% | 95.60% | 95.40% |
| MTTFd | 100 | | |
| CFF | 80% | | |

[1] ref. CEI EN 61496-1; CEI EN 61496-2 [2] ref. CEI EN 61508 [3] ref. CEI EN 62061 + CEI EN 62061/EC2 [4] ref. UNI EN ISO 13849-1

# electrical diagrams of the connections

## LS4 series receiver

M12
(8 poles male)

LS4ER / **-***
LS4ER / **-***M

| pin | color | signal | type | description |
|---|---|---|---|---|
| 1 | WH | OSSD1 | OUT | first safety static output (PNP) |
| 2 | BN | $24V_{DC}$ | POWER | power supply input |
| 3 | GN | OSSD2 | OUT | second safety static output (PNP) |
| 4 | YE | EDM | IN | connection to Restart and/or external control contacts (EDM) |
| 5 | GY | Mode_A | IN | selection of the Start/Restart/EDM mode |
| 6 | PK | Mode_B | IN | selection of the Start/Restart/EDM mode |
| 7 | BU | 0V | POWER | supply voltage reference |
| 8 | RD | FE | GND | functional earth |

8 poles male

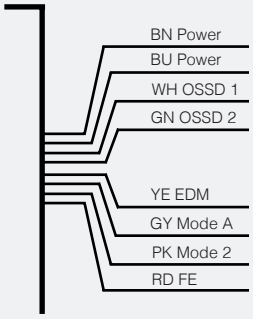


LS4ER / **-***K

possible combinations

| pin4 (YE) | pin5 (GY) | pin6 (RK) | function |
|---|---|---|---|
| $24V_{DC}$ | $24V_{DC}$ | 0V | AUTO |
| K1 + K2 $+24V_{DC}$ | $24V_{DC}$ | 0V | AUTO + EDM |
| restart $+24V_{DC}$ | 0V | $24V_{DC}$ | MANUAL |
| K1 + K2 + restart $+24V_{DC}$ | 0V | $24V_{DC}$ | MANUAL + EDM |

| | | | |
|---|---|---|---|
| BK | black | OG | orange |
| BN | brown | GN | green |
| RD | red | BU | blue |
| YE | yellow | GY | grey |
| WH | white | VT | violet |
| PK | pink | | |

NOTE: On these Standard and Master models it is possible to choose the operating modes by changing the wiring. By using the EDM function it is possible to extend the safety control to the contactors controlled downstream, that must be the type with guided contacts and approved for safety applications.
With this model of curtain you can use the relay module SB300, but the EDM input must be connected.

M12
(5 poles male)

LS4ER / **-***B

| pin | color | signal | type | description |
|---|---|---|---|---|
| 1 | BN | $24V_{DC}$ | POWER | power supply input |
| 2 | WH | OSSD1 | OUT | first safety static output (PNP) |
| 3 | BU | 0V | POWER | supply voltage reference |
| 4 | BK | OSSD2 | OUT | second safety static output (PNP) |
| 5 | GY | FE | GND | functional earth |

NOTE: These Base models with automatic restart do not have the EDM function, the device downstream must therefore be able to control its own safety integrity independently. With this model of curtain you can not use the relay module SB300, because the EDM input is not available.

# electrical diagrams of the connections

## LS4 series receiver

10 poles cable
(IP69K with heater receiver unit)

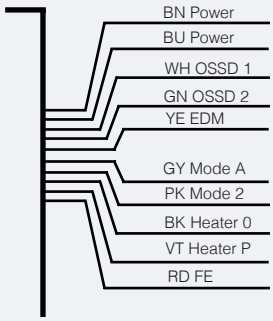


LS4ER / **-***H

| color | signal | type | description |
|---|---|---|---|
| BN | $24V_{DC}$ | POWER | power supply input |
| BU | 0v | POWER | supply voltage reference |
| WH | OSSD1 | OUT | first safety static output (PNP) |
| GN | OSSD2 | OUT | second safety static output (PNP) |
| YE | EDM | IN | connection to restart and/or external control contacts (EDM) |
| GY | Mode_A | IN | selection of the Start/Restart/EDM mode |
| PK | Mode_B | IN | selection of the Start/Restart/EDM mode |
| BK | Heater 0 | POWER | heater supply common |
| PK | Heater p | POWER | heater supply 24V DC or AC |
| BK | FE | GND | functional earth |

### possible combinations

| YE | GY | PK | function |
|---|---|---|---|
| $24V_{DC}$ | $24V_{DC}$ | 0V | AUTO |
| K1 + K2 $+24V_{DC}$ | $24V_{DC}$ | 0V | AUTO + EDM |
| restart $+24V_{DC}$ | 0V | $24V_{DC}$ | MANUAL |
| K1 + K2 + restart $+24V_{DC}$ | 0V | $24V_{DC}$ | MANUAL + EDM |
| x | 0V | 0V | NOT ADMITTED |
| x | $24V_{DC}$ | $24V_{DC}$ | NOT ADMITTED |

| | |
|---|---|
| black | orange |
| brown | green |
| red | blue |
| yellow | grey |
| white | violet |
| pink | |

NOTE: On these Standard models it is possible to choose the operating modes by changing the wiring. By using the EDM function it is possible to extend the safety control to the contactors controlled downstream, that must be the type with guided contacts and approved for safety applications. The supply voltage of the thermostated heater can be indifferently 24 $V_{DC}$ or 24 $V_{AC}$. With this model of curtain you can use the relay module SB300, but the EDM input must be connected.

## LS4 series emitter unit

M12
(5 poles male connector)

LS4ER / **-***
LS4ER / **-***M

| pin | color | signal | type | description |
|---|---|---|---|---|
| 1 | BN | POWER | OUT | power supply input |
| 2 | WH | IN | POWER | range or test selection input |
| 3 | BU | POWER | OUT | supply voltage reference |
| 4 | BK | IN | IN | range or test selection input |
| 5 | GY | IN | IN | functional earth |

5 poles cable

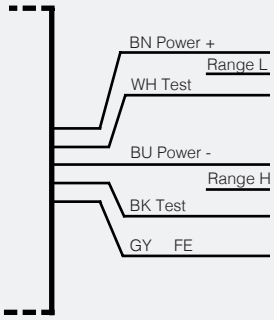


LS4ER / **-***K

### possible combinations

| pin2 (WH) | pin6 (BK) | function |
|---|---|---|
| LO | LO | test |
| LO | HI | high range |
| HI | LO | low range |
| HI | HI | NOT ADMITTED |
| Levels: LO = < 5V or open; HI = 11 to 30V | | |

| | |
|---|---|
| black | orange |
| brown | green |
| red | blue |
| yellow | grey |
| white | violet |
| pink | |

NOTE: The Test contact is necessary only if the safety chain of the receiver downstream must be periodically checked. If the Test is not necessary (the safety light curtain has already been tested independently) replace the contact with direct wiring at +24 $V_{DC}$.

## LS4 series IP69K with heater Emitter unit

8 poles cable
(IP69K with heater emitter unit)

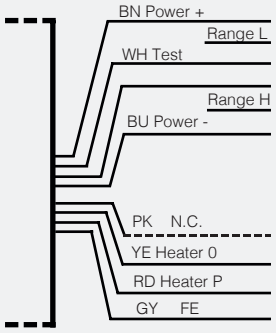


LS4ER / **-***H

| color | signal | type | description |
|---|---|---|---|
| BN | $24_{CC}$ | POWER | power supply input |
| WH | Range L/Test | IN | range or test selection input |
| BU | 0V | POWER | supply voltage reference |
| GN | Range H/Test | IN | range or test selection input |
| PK | not connected | N.C. | not connected |
| YE | heater 0 | POWER | heater supply common |
| RD | heater P | POWER | heater supply 24V DC or AC |
| GY | FE | GND | functional earth |

**possible combinations**

| WH | GN | function |
|---|---|---|
| LO | LO | test |
| LO | HI | high range |
| HI | LO | low range |
| HI | HI | not admitted |
| levels: LO = <5V or open; HI = 11 to 30V | | |

| | | | |
|---|---|---|---|
| BK | black | OG | orange |
| BN | brown | GN | green |
| RD | red | BU | blue |
| YE | yellow | GY | grey |
| WH | white | VT | violet |
| PK | pink | | |

NOTE The Test contact is necessary only if the safety chain of the receiver downstream must be periodically checked. If the Test is not necessary (the safety light curtain has already been tested independently) replace the contact with direct wiring at +24VDC. The supply voltage of the thermostated heater can be indifferently 24 $V_{DC}$ or 24 $V_{AC}$. The PK cable is not connected internally

## LS4 series emitter and receiver unit : master slave secondary connectors

M12
(5 poles male)

LS4ER / **-***M
LS4ER / **-***S
LS4ER / **-***F

| pin | color | signal | type | description |
|---|---|---|---|---|
| 1 | BN | $24V_{CC}$ | POWER | power supply (supply line for the upstream device) |
| 2 | WH | Line 1 | IN/OUT | communication line 1 |
| 3 | BU | 0V | POWER | power supply reference (supply line for the upstream device) |
| 4 | BK | Line 2 | IN/OUT | communication line 2 |
| 5 | GY | FE | GND | functional earth |

NOTE: Preferably use Female/Female pre-wired extension cables (it is not permitted to access the connection lines).

# dimensions (mm)

## dimensions of Standard, Base, Final models; view of the base and head with relevant connectors; see Tab.: 1 and 3

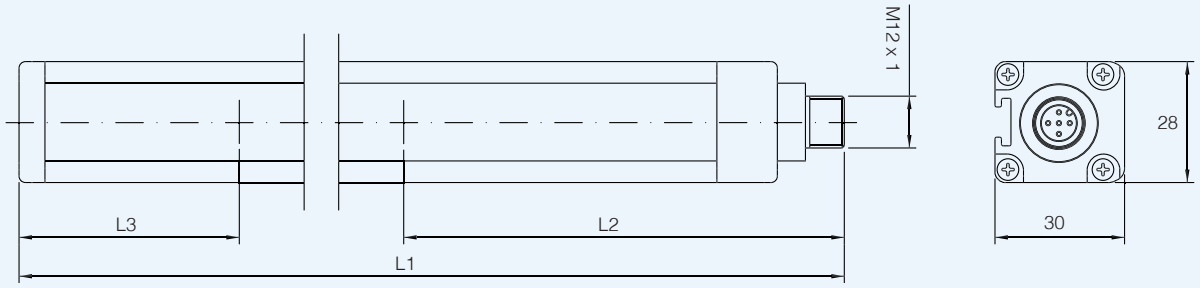

# dimensions (mm)

**Dimensions of Master and Slave models; view of the base and head with relevant connectors; see Tab.: 2 and 3**

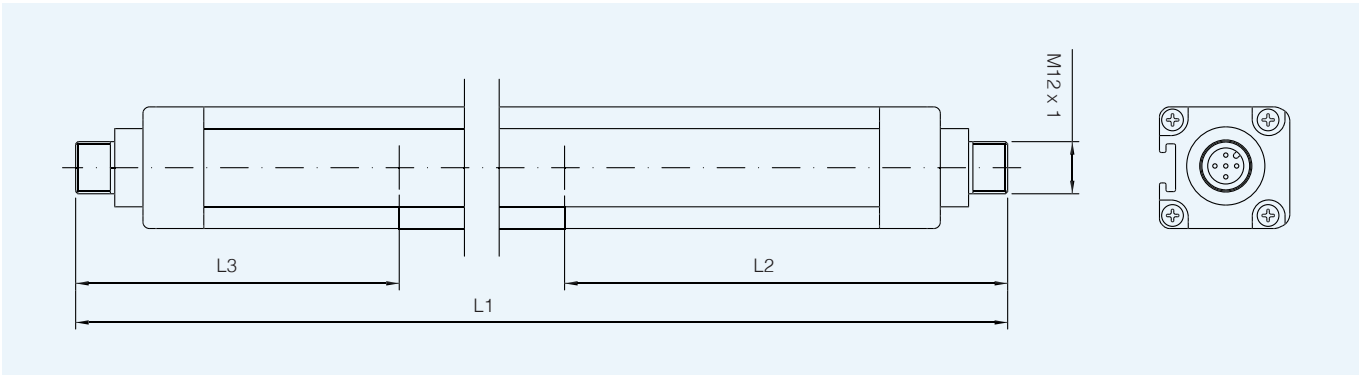


TAB.1

| LS4 series | | | | | | | | | | | | |
|---|---|---|---|---|---|---|---|---|---|---|---|---|
| paired models | | *** | | | | | | | | | | dimensions (mm) |
| | | 015 | 030 | 045 | 060 | 075 | 090 | 105 | 120 | 135 | 150 | |
| LS4ER/**-***<br>LS4ER/**-***B<br>LS4ER/**-***F | standard, base, final | 213 | 363 | 513 | 663 | 813 | 963 | 1,113 | 1,263 | 1,413 | 1,563 | L1 |
| | | 61,5 | | | | | | | | | | L2 (bottom-most beam) |
| | | 11 | | | | | | | | | | L3 (top-most beam) |
| LS4ER/**-***M<br>LS4ER/**-***S | master and slave | 236.5 | 386.5 | 536.5 | 686.5 | 536.5 | 986.5 | 1,136.5 | 1,286.5 | 1,436.5 | 1,566.5 | L4 |
| | | 61.5 | | | | | | | | | | L5 (bottom-most beam) |
| | | 34.5 | | | | | | | | | | L6 (top-most beam) |

TAB.2

| LS4 series | | | | | |
|---|---|---|---|---|---|
| paired models | | *** | | | dimensions (mm) |
| | | 0A-050 | 0B-080 | 0C-090 | |
| LS4ER/**-***<br>LS4ER/**-***B<br>LS4ER/**-***F | standard, base, final | 653 | 953 | 1,053 | L1 |
| | | 102 | | | L2 (bottom-most beam) |
| | | 51 | | | L3 (top-most beam) |
| LS4ER/**-***M<br>LS4ER/**-***S | master and slave | 677 | 977 | 1,077 | L4 |
| | | 102 | | | L5 (bottom-most beam) |
| | | 75 | | | L6 (top-most beam) |

TAB.3

| LS4 series | | | | | | | | | |
|---|---|---|---|---|---|---|---|---|---|
| models | | LS4R (receiver) | | | | LS4R (emitter) | | | |
| | | base view | connector | base view | connector | base view | connector | base view | connector |
| LS4ER/**-*** | standard | C | M12, 8p, M | A | - | B | M12, 5p, M | A | - |
| LS4ER/**-***B | base | B | M12, 5p, M | A | - | B | M12, 5p, M | A | - |
| LS4ER/**-***F | final | B (1) | M12, 5p, M | A | - | B (1) | M12, 5p, M | A | - |
| LS4ER/**-***M | master | F | M12, 8p, M | D (1) | M12, 5p, M | E | M12, 5p, M | D (1) | M12, 5p, M |
| LS4ER/**-***S | slave | E (1) | M12, 5p, M | D (1) | M12, 5p, M | E (1) | M12, 5p, M | D (1) | M12, 5p, M |

NOTE: These connectors are dedicated to a communication BUS of the Master/ Slave chain, it is not permissible to access the lines, always use cord sets.

## accessories

| ST204* / outfit mounting accessories | | | |
|---|---|---|---|
| product | to used with | dimensions (mm) | description / installation |
| | LS4 series | 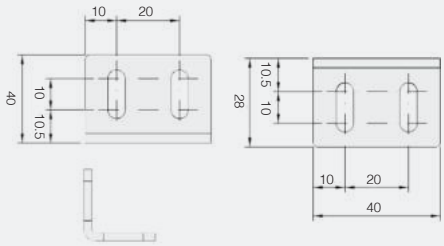  | L Bracket<br>Supplied as standard, 4 pieces to couple to the length from 300 to 1,050, 6 pieces for the length from 1,200 to 1,500. |
| | LS4 series | 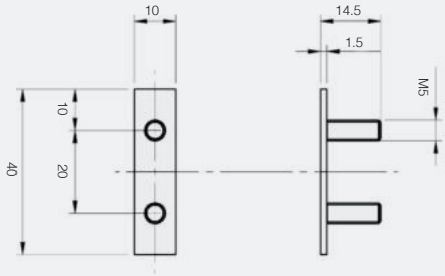  | Insert with threaded bolts and nuts<br>Supplied as standard, in a number corresponding to the brackets. |

## outfit brackets mounting

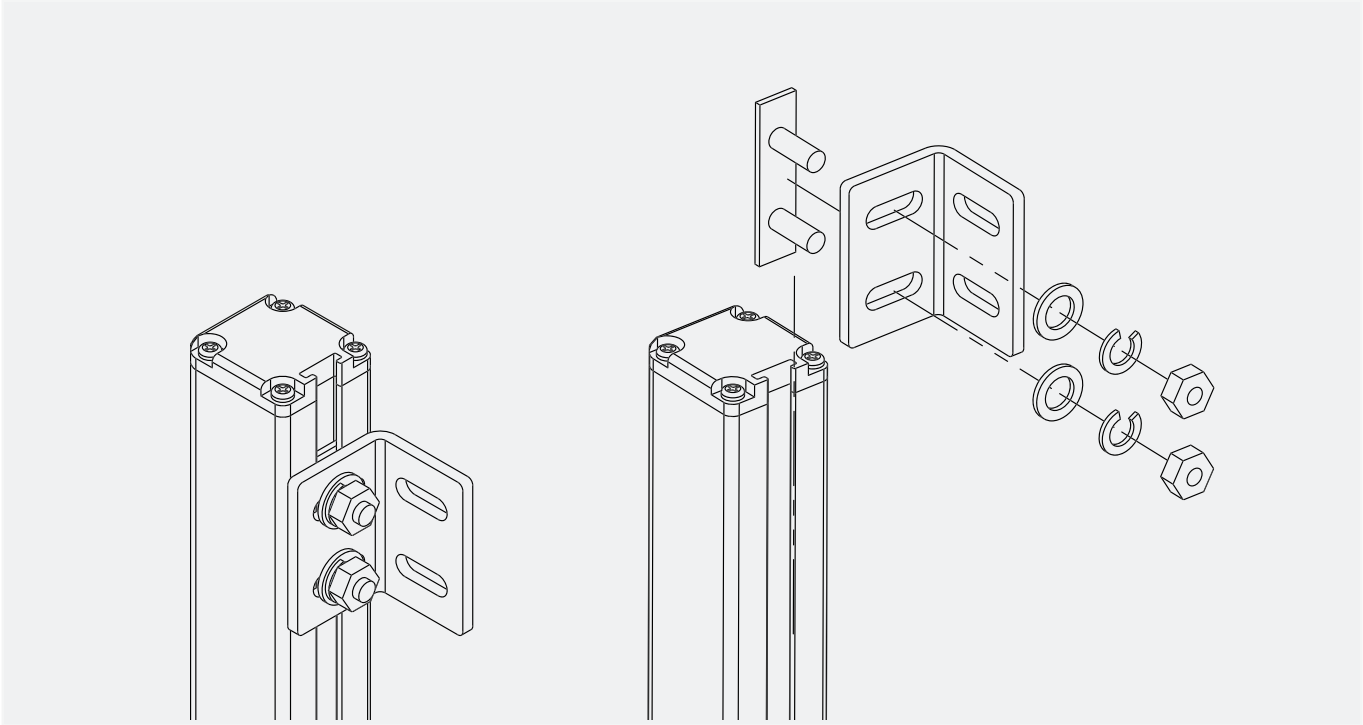

# dimensions (mm)

IP69K

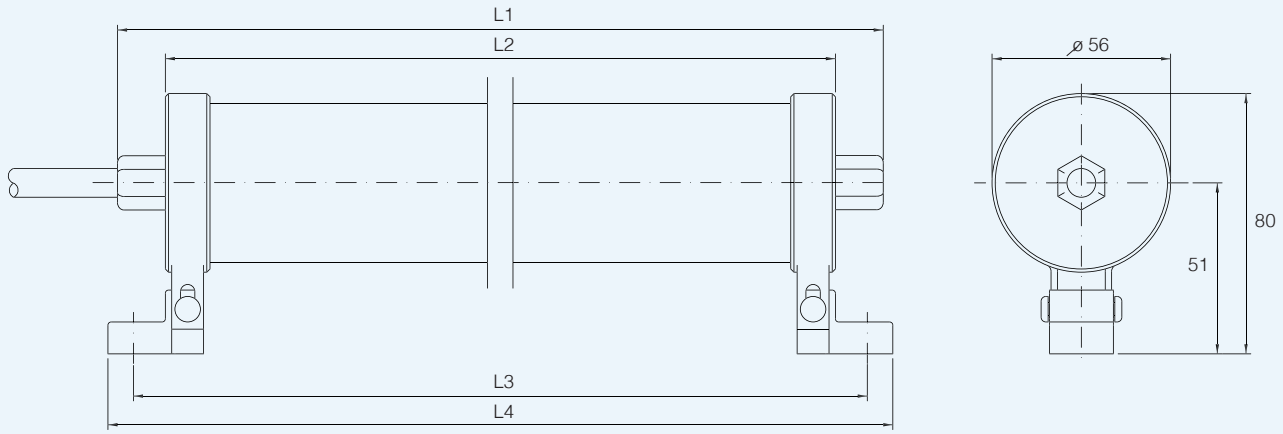


The light Curtain is supplied already fitted inside the transparent housing.
The power cord has a standard length of 10 meters and a maximum diameter of 6 mm. The brackets are included.

| models | 150 | 300 | 450 | 600 | 750 | 900 | 1,050 | 1,200 | 1,350 | 1,500 | 2B | 3B | 4B |
|---|---|---|---|---|---|---|---|---|---|---|---|---|---|
| L1 dimensions | 320 | 470 | 620 | 770 | 920 | 1,070 | 1,220 | 1,370 | 1,520 | 1.670 | 760 | 1,060 | 1,160 |
| L2 dimensions | 290 | 440 | 620 | 740 | 890 | 1,040 | 1.190 | 1,340 | 1,490 | 1,640 | 730 | 1,030 | 1,130 |
| L3 dimensions (± 3) (mm) | 315 | 465 | 590 | 765 | 915 | 1,065 | 1.215 | 1.365 | 1,515 | 1,665 | 755 | 1,055 | 1,155 |
| L4 dimensions (mm) | 337 | 487 | 637 | 787 | 937 | 1,087 | 1.237 | 1.387 | 1,537 | 1,687 | 777 | 1,077 | 1,177 |

# LP4ER series
## Light Curtains
Type 4

## features

- Type 4 according IEC 61496-1 and IEC 61496-2
- Robust housing (50x60 mm) for applications in presence of heavy shocks and vibrations
- 40 mm resolution for hand protection and 2,3,4 beams for body protection/access control
- Operating distance up to 16 m (standard version) and up to 60 m (LONG RANGE version)
- Integrated functions: MANUAL/AUTOMATIC Restart, EDM and operating distance selectable
- Standard M12 5 poles connector on TX unit and M12 8 poles or M23 9 poles on RX unit

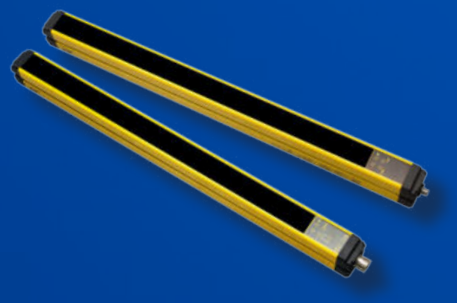

## web contents

- Application notes
- Photos
- Catalogue / Manuals

## code description

LP4 ER / 40 - 060 12

| | | |
|---|---|---|
| series | LP4 | Type 4 safety light curtains 50 x 60 mm compact housing |
| couple | ER | Emitter + Receiver couple |
| beams | 40 | 40 mm resolution; hand protection |
| | 0A | 2 beams resolution; body protection; 500 mm controlled height |
| | 0B | 3 beams resolution; body protection; 800 mm controlled height |
| | 0C | 4 beams resolution; body protection; 900 mm controlled height |
| height | 050...120 | Protected height from 500 to 1,200 mm |
| range | | Standard model with selectable MANUAL/AUTOMATIC Restart and EDM functions |
| | L | Long range model |
| | 12 | Model with M12 connector on receiver unit |

## available models

2, 3, 4 beams resolution; 0...6 / 1...16 m controlled distance; 7 msec responce time

| protected height (mm) | n° of beams | model |
|---|---|---|
| 510 | 2 | LP4ER/0A-050 |
| 810 | 3 | LP4ER/0B-080 |
| 910 | 4 | LP4ER/0C-090 |

## available models

40 mm resolution; 8...30 / 18...60 m controlled distance

| protected height (mm) | n° of beams | response time (msec) | model |
|---|---|---|---|
| 610 | 20 | 17 | LP4ER/40-050L |
| 910 | 30 | 23 | LP4ER/40-090L |
| 1,210 | 40 | 28.5 | LP4ER/40-120L |

## available models

2, 3, 4 beams resolution; 8...30 / 18...60 m controlled distance

| protected height (mm) | n° of beams | response time (msec) | model |
|---|---|---|---|
| 510 | 2 | 500 | LP4ER/0A-050L |
| | | | LP4ER/0A-050L12 |
| 810 | 3 | 800 | LP4ER/0B-080L |
| | | | LP4ER/0B-080L12 |
| 910 | 4 | 900 | LP4ER/0C-090L |
| | | | LP4ER/0C-090L12 |

## technical specifications

| | LP4ER/**-***-- | |
|---|---|---|
| operating voltage | 19.2...28.8 Vdc | PELV power supplier according to EN 60204-1 Cap.6.4 |
| power consumption, Receiver | 6 W | no load |
| power consumption, Emitter | 3 W | |
| output type | 2 x PNP | OSSD safety outputs |
| output current | 500 mA | higher values are considered overload |
| equivalent resistive load | 48 Ω | lower values are considered short circuit |
| capacitive load | 2 µF | lower values may be considered short circuit |
| recovery time | 15 s | |
| response time OSSDs | 30 ms | |
| OSSDs self test pulse duration | 100 µs | |
| restart signal duration | 100 ms | |
| Test signal duration | 40 ms | |
| effective aperture angle (EAA) | ≤ ± 2,5° | IEC 61496-1 |
| artificial light rejection | according to IEC 61496-2 | according to the reported standards |
| ambient light rejection | according to IEC 61496-2 | |
| IP mechanical protection | IP65 | |
| operating temperature | 0...+55°C | |
| storage temperature | -25...+70°C | to be respected also during transportation |
| humidity | 95% | no condensation |
| vibrations | according to IEC 61496-1 | according to the reported standards |
| shocks | according to IEC 61496-1 | |
| dimension | 50 mm (front)<br>x 60 mm | |
| S0 connectors Emitter | 1 x M12 5p male | |
| S0 connectors Receiver | 1x M23, 19p, male<br>1x M12, 8p, male (L12 male) | |

## safety parameters

| LP4ER/40-***L | 060 | 090 | 120 |
|---|---|---|---|
| height | 610 | 910 | 1210 |
| number of beams | 20 | 30 | 40 |
| response time (ms) | 17 | 23 | 28,5 |
| type [1] | 4 | | |
| SIL[2] | 3 | | |
| SILCL [3] | 3 | | |
| PL [4] | e | | |
| PFHd | 1,02E-08 | 1,17E-08 | 1,32E-08 |
| DCavg | 98,37% | 98,49% | 98,57% |
| MTTFd (years) | 100 | | |
| CFF | 80% | | |

| LP4ER/**-*** | 0A-050 | 0B-080 | 0C-090 |
|---|---|---|---|
| height | 500 | 800 | 900 |
| number of beams | 2 | 3 | 4 |
| response time (ms) | 7 | 7 | 7 |
| type [1] | 4 | | |
| SIL[2] | 3 | | |
| SILCL [3] | 3 | | |
| PL [4] | e | | |
| PFHd | 7,53E-09 | 7,70E-09 | 7,87E-09 |
| DCavg | 97,94% | 97,99% | 98,03% |
| MTTFd (years) | 100 | | |
| CFF | 80% | | |

[1] ref. CEI EN 61496-1; CEI EN 61496-2
[2] ref. CEI EN 61508
[3] ref. CEI EN 62061 + CEI EN 62061/EC2
[4] ref. UNI EN ISO 13849-1

| LP4ER/**-***L | 0A-050 | 0B-080 | 0C-090 |
|---|---|---|---|
| height | 500 | 800 | 900 |
| number of beams | 2 | 3 | 4 |
| response time (ms) | 7 | 7 | 7 |
| type [1] | 4 | | |
| SIL[2] | 3 | | |
| SILCL [3] | 3 | | |
| PL [4] | e | | |
| PFHd | 7.53E-09 | 7.70E-09 | 7.87E-09 |
| DCavg | 97.94% | 97.99% | 98.03% |
| MTTFd (years) | 100 | | |
| CFF | 80% | | |

| LP4ER/**-***L12 | 0A-050 | 0B-080 | 0C-090 |
|---|---|---|---|
| height | 500 | 800 | 900 |
| number of beams | 2 | 3 | 4 |
| response time (ms) | 7 | 7 | 7 |
| type [1] | 4 | | |
| SIL[2] | 3 | | |
| SILCL [3] | 3 | | |
| PL [4] | e | | |
| PFHd | 7.53E-09 | 7.70E-09 | 7.87E-09 |
| DCavg | 97.94% | 97.99% | 98.03% |
| MTTFd (years) | 100 | | |
| CFF | 80% | | |

## electrical diagrams of the connections

**LP4ER series**

M12
(5 poles maleTX unit)

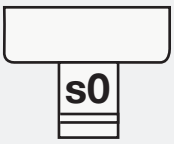


LP4ER/ **-***_

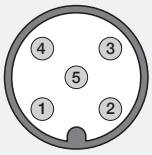


| pin | color | signal | type | description |
|---|---|---|---|---|
| 1 | BN | $24V_{DC}$ | POWER | power supply input |
| 2 | WH | range H/Test | IN | selection input |
| 3 | BU | 0V | POWER | supply voltage reference |
| 4 | BK | range H/Test | IN | selection input |
| 5 | GY | PE | GND | protection earth |

**possible combinations**

| pin 2 | pin 4 | function |
|---|---|---|
| LO | LO | test (no emission) |
| LO | HI | emission with high range |
| HI | LO | emission with low range |
| HI | HI | not admitted |

| | | | |
|---|---|---|---|
| BK | black | OG | orange |
| BN | brown | GN | green |
| RD | red | BU | blue |
| YE | yellow | GY | grey |
| WH | white | VT | violet |
| PK | pink | | |

The Test contact is necessary only if the entire safety chain of the receiver downstream must be tested.
If the Test is not necessary replace the TEST contact with direct wiring at 24 $V_{DC}$.

# electrical diagrams of the connections

## LP4ER series

M23
(19 poles male RX unit)

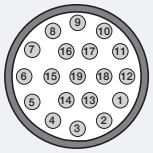


LP4ER/**-***
LP4ER/**-***L

| pin | color | signal | type | description |
|---|---|---|---|---|
| 1 | WH | N.C. | - | not connected |
| 2 | RD | OSSD2 | OUT | second safety static output (PNP) |
| 3 | GY | OSSD1 | OUT | first safety static output (PNP) |
| 4 | YE | System Status + Sign. levlel | OUT | repetition of OSSDs status, see note + low signal level indication, see note |
| 5 | GN | N.C. | - a b | not connected |
| 6 | BU | $0V_{CC}$ | POWER | supply voltage reference |
| 7 | VT | N.C. | - | not connected |
| 8 | GY - PK | N.C. | - | not connected |
| 9 | RD - BU | N.C. | - | not connected |
| 10 | WH - GN | N.C. | - | not connected |
| 11 | BK | Abilitaz. EDM | IN | enabling for external contactor control |
| 12 | WH - GN | PE | GND | earth protection connection |
| 13 | WH - YE | Man. / Autom. | IN | selection of the Start/Restart mode |
| 14 | BN - YE | start | IN | connection to the Start/Restart button |
| 15 | WH - GY | N.C. | - | not connected |
| 16 | BN - GY | N.C. | - | not connected |
| 17 | WH - PK | N.C. | - | not connected |
| 18 | BN - GN | EDM | IN | connection to the external control contacts |
| 19 | BN | $24V_{CC}$ | POWER | supply voltage input |

| | | | | | | | |
|---|---|---|---|---|---|---|---|
| **BK** | black | **OG** | orange | **YE** | yellow | **GY** | grey |
| **BN** | brown | **GN** | green | **WH** | white | **VT** | violet |
| **RD** | red | **BU** | blue | **PK** | pink | | |

## serie LP4ER

M12
(8 poles male RX unit L12 models)

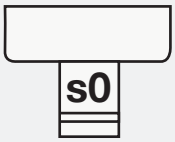


LP4ER/0*-***L12

| pin | color | signal | type | description |
|---|---|---|---|---|
| 1 | WH | OSSD1 | OUT | first safety static output (PNP) |
| 2 | BN | $24V_{CC}$ | POWER | supply voltage |
| 3 | GN | OSSD2 | OUT | second safety static output (PNP) |
| 4 | YE | EDM | IN | connection to the external control contacts (EDM) or connected at 0V to exclude EDM |
| 5 | GY | Mode_A | IN | selection of the manual or automatic Start/Restart mode |
| 6 | PK | Mode_B | IN | selection of the manual or automatic Start/Restart mode |
| 7 | BU | 0V | POWER | supply voltage reference |
| 8 | RD | FE | GND | protection earth |

NOTE: On these models it is possible to choose the operating modes by changing the wiring. By using the EDM function it is possible to extend the safety control to the contactors controlled downstream, that must be the type with guided contacts and approved for safety applications.

# dimensions (mm)

## LP4ER/40-***L, LP4ER/0*-*** - Receiver

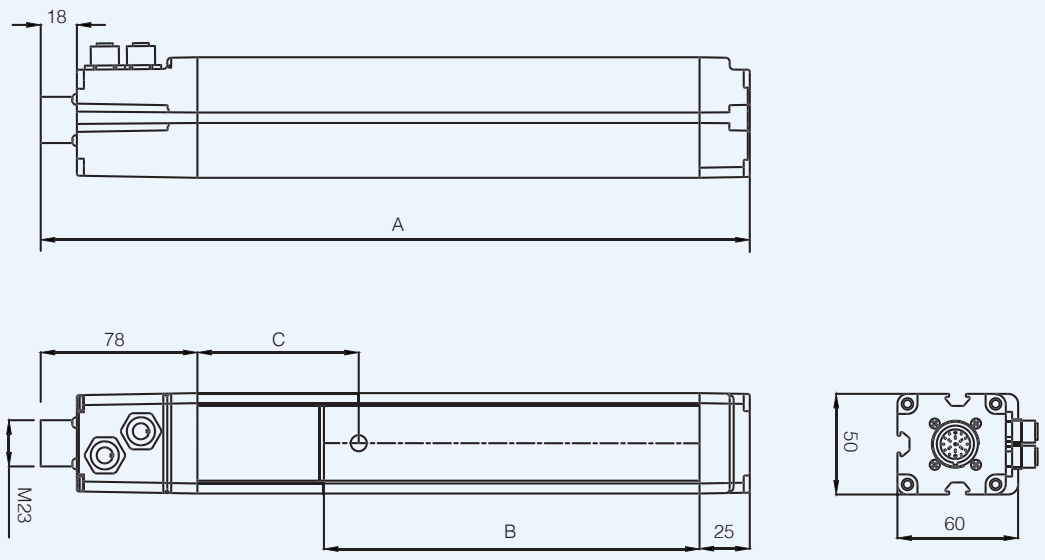


## LP4ER/40-***L12, LP4ER/0*-***L, LP4ER/0*-***L12 - Emitter

| dimensions | LP4ER/**-*** | | | LP4ER/**-***L | | | | | |
|---|---|---|---|---|---|---|---|---|---|
| | 0A-050 | 0B-080 | 0C-090 | 40-060 | 40-090 | 40-120 | 0A-050 | 0B-080 | 0C-090 |
| A (TX) | 736 | 1,036 | 1,136 | 736 | 1,036 | 1,336 | 736 | 1,036 | 1,136 |
| B (protected height) | 510* | 810* | 910* | 610 | 910 | 1,210 | 510* | 810* | 910* |
| C (first beam quote) | 120 | | | 76 | | | | | |

# accessories

## ST203 / outfit mounting accessories

| product | to be used with | dimensions (mm) | description / installation |
|---|---|---|---|
| | LP4 series | 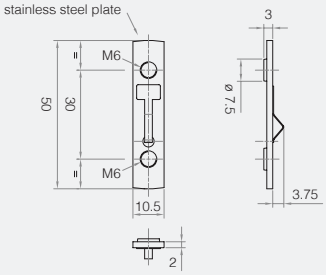  | **Fastening insert for 50x60 profile. Part of the standard kit**<br>Two pieces are provided for each bracket ST202. |

## ST202 / outfit mounting accessories

| product | to be used with | dimensions (mm) | description / installation |
|---|---|---|---|
| | LP4 series | 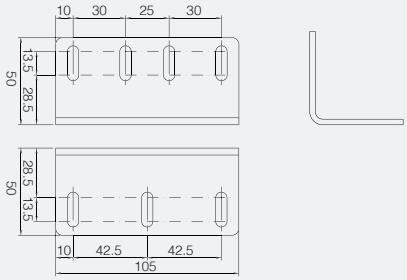  | **L Bracket**<br>Long bracket. Part of the standard kit. Two pieces are provided for each couples. Must be applied in the housin part of the body. |

# LP4PF series
## Light Curtains
Type 4

## features

- Type 4 according IEC 61496-1 and IEC 61496-2
- Robust housing (50x60 mm) for applications in presence of heavy shocks and vibrations
- Complete passive unit made by pre-mounted and pre-aligned integrated mirrors
- Protected height 500, 800 an 900 mm
- Resolutions 2, 3, 4 beams for body protection / access control
- Integrated functions: MANUAL/AUTOMATIC Restart and EDM
- Operating distance up to 6 m
- M12 8 polse standard connector

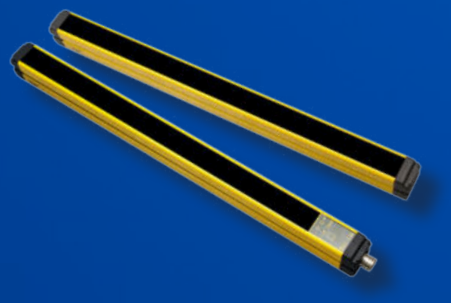

## web contents

- Application notes
- Photos
- Catalogue / Manuals



## code description

LP4 PF / 0A - 050

| | | |
|---|---|---|
| series | LP4 | Type 4 safety light curtains 50 x 60 mm compact housing |
| couple | PF | M12 connecored active element + passive element couple |
| beams | 0A | 2 beams resolution; body protection; 500 mm protected height |
| | 0B | 3 beams resolution; body protection; 800 mm protected height |
| | 0C | 4 beams resolution; body protection; 900 mm protected height |
| protected height | 050 | 500 mm protected height |
| | 080 | 800 mm protected height |
| | 090 | 900 mm protected height |

## available models

0...6 m controlled distance; ≤ 7 msec response time

| protected height (mm) | n° of beams | dist. between beams (mm) | model |
|---|---|---|---|
| 510 | 2 | 500 | LP4PF/0A-050 |
| 810 | 3 | 800 | LP4PF/08-080 |
| 910 | 4 | 900 | LP4PF/0C-090 |

## technical specifications

| | LP4PF/**-*** | |
|---|---|---|
| operating voltage | 19.2...28.8 Vdc | PELV power supplier according to EN 60204-1 Cap.6.4 |
| power consumption, Receiver | 6 W | no load |
| power consumption, Emitter | 3 W | |
| output type | 2 x PNP | OSSD safety outputs |
| output current | 500 mA | higher values are considered overload |
| equivalent resistive load | 48 Ω | lower values are considered short circuit |
| capacitive load | 2 µF | lower values may be considered short circuit |
| recovery time | 15 s | |
| response time (OSSDs OFF) | 30 ms | |
| effective aperture angle (EAA) | ≤ ± 2.5° | IEC 61496-1 |
| artificial light rejection | according to IEC 61496-2 | according to the reported standards |
| ambient light rejection | according to IEC 61496-2 | |
| IP mechanical protection | IP65 | without any additional precaution the device can't be used for outdoor applications |
| operating temperature | 0...+55°C | no condensation |
| storage temperature | -25...+70°C | to be respected also during transportation |
| humidity (no condensation) | 95% (no condensation) | no condensation |
| vibrations | according to IEC 61496-1 | according to the reported standards |
| shocks | according to IEC 61496-1 | |
| cable length (power supply/outputs) | 100 m | cable section 0.34 mm2 (to respect max length) |
| dimension | 50 mm (front) x 60 mm | painted aluminium RAL 1012 |
| connector S0 active unit | 1 x M12 8p male | PVC sheath, ø 5.5 mm L 10 m, 0.34 mm2 |

## safety parameters

| LP4PF/**-***_ | 0A-050 | 0B-080 | 0C-090 |
|---|---|---|---|
| dist. between beams | 500 | 800 | 900 |
| number of beams | 2 | 3 | 4 |
| response time (ms) | ≤ 7 | | |
| type [1] | 4 | | |
| SIL[2] | 3 | | |
| SILCL [3] | 3 | | |
| PL [4] | e | | |
| PFHd | 4.83E-09 | 4.92E-09 | 5.01E-09 |
| DCavg | 98.14% | 98.16% | 98.19% |
| MTTFd (years) | 100 | | |
| CFF | 80% | | |

[1] ref. CEI EN 61496-1; CEI EN 61496-2
[2] ref. CEI EN 61508
[3] ref. CEI EN 62061 + CEI EN 62061/EC2
[4] ref. UNI EN ISO 13849-1

## electrical diagrams of the connections

**LP4PF series**

M12
(8 poles male active unit)

LP4PF / **-***

| | | | | | |
|---|---|---|---|---|---|
| BK | black | OG | orange | WH | white |
| BN | brown | GN | green | PK | pink |
| RD | red | BU | blue | VT | violet |
| YE | yellow | GY | grey | | |

| pin | color | signal | type | description |
|---|---|---|---|---|
| 1 | WH | OSSD1 | OUT | first safety static output (PNP) |
| 2 | BN | $24V_{CC}$ | POWER | supply voltage |
| 3 | GN | OSSD2 | OUT | second safety static output (PNP) |
| 4 | YE | EDM | IN | connection to the external control contacts (EDM) or connected at 0V to exclude EDM |
| 5 | GY | Mode_A | IN | selection of the manual or automatic Start/Restart mode |
| 6 | PK | Mode_B | IN | selection of the manual or automatic Start/Restart mode |
| 7 | BU | 0V | POWER | supply voltage reference |
| 8 | RD | FE | GND | protection earth |

NOTE: On these models it is possible to choose the operating modes by changing the wiring. By using the EDM function it is possible to extend the safety control to the contactors controlled downstream, that must be the type with guided contacts and approved for safety applications

## dimensions (mm)

**LP4PF/0A-050**

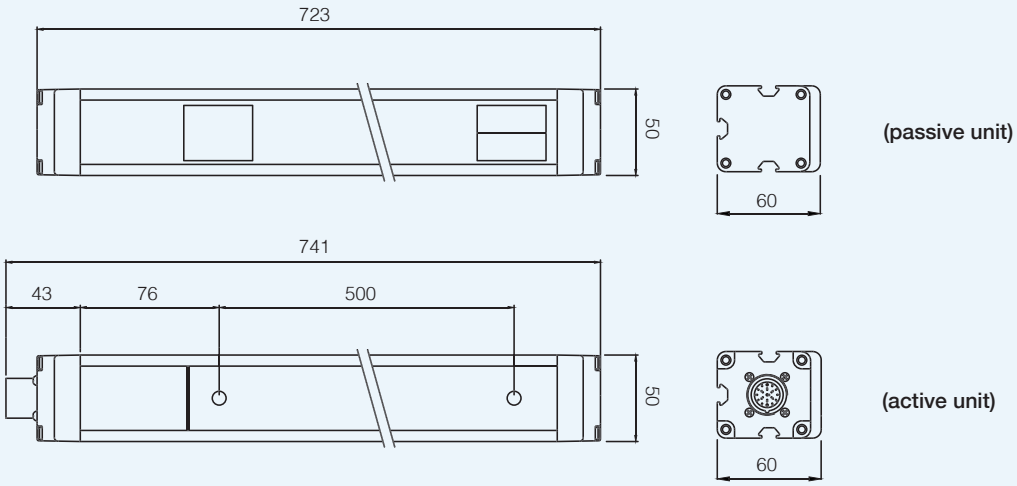


**LP4PF/0B-080**

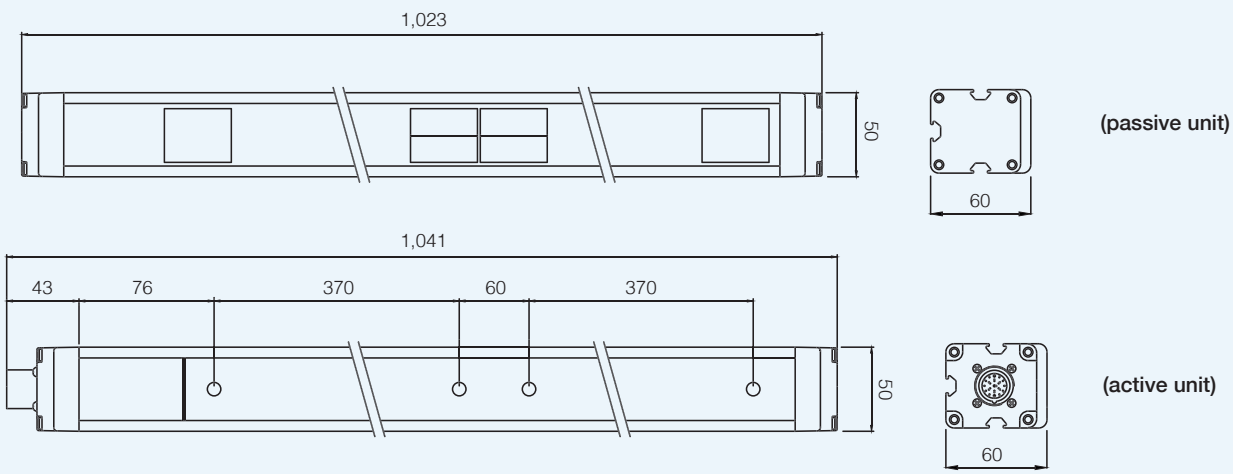

## dimensions (mm)

**LP4PF/0C-090**

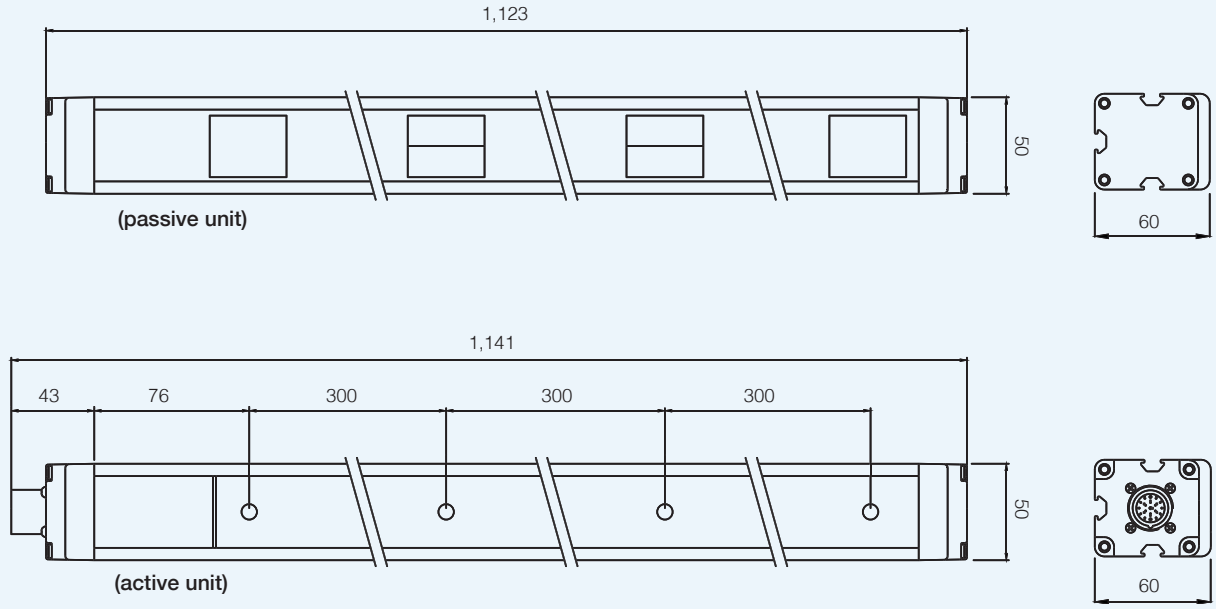


## accessories

**ST203 / outfit mounting accessories**

| product | to be used with | dimensions (mm) | description / installation |
|---|---|---|---|
| | LP4 series | 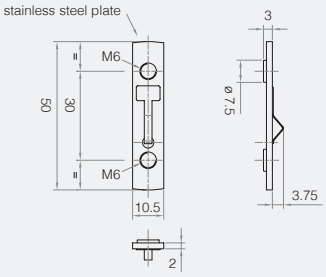  | **Fastening insert for 50x60 profile. Part of the standard kit**<br>Two pieces are provided for each bracket ST202. |

**ST202 / outfit mounting accessories**

| product | to be used with | dimensions (mm) | description / installation |
|---|---|---|---|
| | LP4 series | 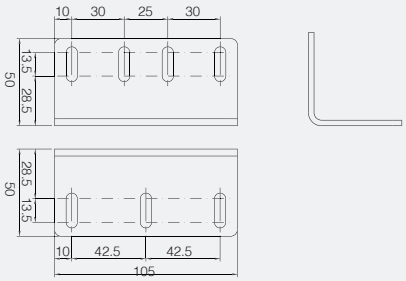  | **L Bracket**<br>Long bracket. Part of the standard kit. Two pieces are provided for each couples. Must be applied in the housin part of the body. |

# LP4ER_M series
## Light curtains
Type 4

## features

- Type 4 according IEC 61496-1 and IEC 61496-2
- Robust housing (50 x 60 mm) for applications in presence of heavy shocks and vibrations
- 30 and 40 mm hand protection, 90 mm presence control and 2, 3, 4 beams body protection/access control
- Protected height from 300 mm up to 1800 mm
- Integrated unctions: AUTOMATIC/MANUAL Restart, EDM, range reduction selectable
- Muting and Override function selectable through dedicate wires
- M12 5 poles and M23 19 poles standard connectors

## web contents

- Application notes
- Photos
- Catalogue / Manuals

## code description

LP4 R / 30 - 030 M4 L

| | | |
|---|---|---|
| series | LP4 | Type 4 Safety light Curtains 50 x 60 mm compact housing |
| couple | ER | Emitter + Receiver couple |
| beam | 30 | 30 mm resolution, hand protection |
| | 40 | 40 mm resolution, hand protection |
| | 90 | 90 mm resolution, presence control |
| | 0A | 2 beam resolution, body protection, 500 mm protected height |
| | 0B | 3 beam resolution, body protection, 800 mm protected height |
| | 0C | 4 beam resolution, body protection, 900 mm protected height |
| height | 050...180 | Protected height from 300 to 1,800 mm |
| muting | M4 | Integrated Muting function for 4 Muting sensors |
| range | L | Long range |

## available models

30 mm resolution; 0...6 / 1...16 m controlled distance

| protected height (mm) | n° of beams | response time (msec) | model |
|---|---|---|---|
| 310 | 16 | 12 | LP4ER/30-030M4 |
| 460 | 24 | 15 | LP4ER/30-045M4 |
| 610 | 32 | 18 | LP4ER/30-060M4 |
| 760 | 40 | 21 | LP4ER/30-075M4 |
| 910 | 48 | 24 | LP4ER/30-090M4 |
| 1,060 | 56 | 2 | LP4ER/30-105M4 |
| 1,210 | 64 | 30 | LP4ER/30-120M4 |

## available models

40 mm resolution; 0...6 / 1...16 m controlled distance

| protected height (mm) | n° of beams | response time (msec) | model |
|---|---|---|---|
| 310 | 10 | 9,5 | LP4ER/40-030M4 |
| 460 | 15 | 11 | LP4ER/40-045M4 |
| 610 | 20 | 13 | LP4ER/40-060M4 |
| 760 | 25 | 15 | LP4ER/40-075M4 |
| 910 | 30 | 17 | LP4ER/40-090M4 |
| 1,060 | 35 | 19 | LP4ER/40-105M4 |
| 1,210 | 40 | 21 | LP4ER/40-120M4 |
| 1,360 | 45 | 23 | LP4ER/40-135M4 |
| 1,510 | 50 | 25 | LP4ER/40-150M4 |
| 1,660 | 55 | 27 | LP4ER/40-165M4 |
| 1,810 | 60 | 28.5 | LP4ER/40-180M4 |

## available models

40 mm resolution; 8...30 / 18...60 m controlled distance

| protected height (mm) | n° of beams | response time (msec) | model |
|---|---|---|---|
| 610 | 20 | 13 | LP4ER/40-060M4L |
| 910 | 30 | 23 | LP4ER/40-090M4L |
| 1,210 | 40 | 28.5 | LP4ER/40-120M4L |

## available models

90 mm resolution; 0...6 / 1...16 m controlled distance

| protected height (mm) | n° of beams | response time (msec) | model |
|---|---|---|---|
| 310 | 5 | 7 | LP4ER/90-030M4 |
| 460 | 7 | 8 | LP4ER/90-045M4 |
| 610 | 9 | 9 | LP4ER/90-060M4 |
| 760 | 11 | 10 | LP4ER/90-075M4 |
| 910 | 13 | 10.5 | LP4ER/90-090M4 |
| 1,060 | 15 | 11 | LP4ER/90-105M4 |
| 1,210 | 17 | 12 | LP4ER/90-120M4 |
| 1,360 | 19 | 13 | LP4ER/90-135M4 |
| 1,510 | 21 | 13.5 | LP4ER/90-150M4 |
| 1,660 | 23 | 14 | LP4ER/90-165M4 |
| 1,810 | 25 | 15 | LP4ER/90-180M4 |

## available models

7 msec response time; 0...6 / 1...16 m controlled distance

| protected height (mm) | n° of beams | response time (msec) | model |
|---|---|---|---|
| 510 | 2 | 500 | LP4ER/0A-050M4 |
| 810 | 3 | 800 | LP4ER/0B-080M4 |
| 910 | 4 | 900 | LP4ER/0C-090M4 |

## available models

7 msec responce time; 8...30 / 18...60 m controlled distance

| protected height (mm) | n° of beams | response time (msec) | model |
|---|---|---|---|
| 510 | 2 | 500 | LP4ER/0A-050M4L |
| 810 | 3 | 800 | LP4ER/0B-080M4L |
| 910 | 4 | 900 | LP4ER/0C-090M4L |

# technical specifications

| | LP4ER / **-***M4- | |
|---|---|---|
| operating voltage | 19.2...28.8 Vdc | PELV power supplier according to EN 60204-1 Cap.6.4 |
| power consumption, Receiver | 6 W | no load |
| power consumption, Emitter | 3 W | |
| output type | 2 x PNP | OSSD safety outputs |
| output current | 500 mA | higher values are considered overload |
| equivalent resistive load | 48 Ω | lower values are considered short circuit |
| capacitive load | 2 µF | lower values may be considered short circuit |
| recovery time | 15 s | |
| response time OSSDs | 30 ms | |
| effective aperture angle (EAA) | ≤ ± 2.5° | IEC 61496-1 |
| artificial light rejection | according to IEC 61496-2 | according to the reported standards |
| ambient light rejection | according to IEC 61496-2 | |
| IP mechanical protection | IP65 | without any additional precaution the device can't be used for outdoor applications |
| operating temperature | 0...+55°C | no condensation |
| storage temperature | -25...+70°C | to be respected also during transportation |
| humidity | 95% | no condensation |
| vibrations | according to IEC 61496-1 | according to the reported standards |
| shocks | according to IEC 61496-1 | |
| cable length (power supply/outputs) | 100 m | painted aluminium RAL 1012 |
| dimension | 50 mm (front) x 60 mm | |
| S0 connectors Emitter | 1 x M12, 5p male, nickel-plated brass | |
| S0 connectors Receiver | 1x M23, 19p, male, nickel-plated brass | |
| S1 and S2 connectors (or S1) receiver | 2/1 M12 5p female | |

# safety parameters

| LP4ER/30-***M4 | 030 | 045 | 060 | 075 | 090 | 105 | 120 |
|---|---|---|---|---|---|---|---|
| height (mm) | 160 | 310 | 460 | 610 | 760 | 910 | 1,060 |
| number of beams | 16 | 24 | 32 | 40 | 48 | 56 | 64 |
| response time (ms) | 12 | 15 | 18 | 21 | 24 | 2 | 30 |
| Type [1] | 4 | | | | | | |
| SIL[2] | 3 | | | | | | |
| SILCL [3] | 3 | | | | | | |
| PL [4] | e | | | | | | |
| PFHd | 9.06E-09 | 9.89E-06 | 1.09E-08 | 1.18E-08 | 1.28E-08 | 1.37E-08 | 1.46E-08 |
| DCavg | 98.24% | 98.35% | 98.44% | 98.50% | 98.55% | 98.56% | 98.63% |
| MTTFd (years) | 100 | | | | | | |
| CFF | 80% | | | | | | |

[1] ref. CEI EN 61496-1; CEI EN 61496-2 [2] ref. CEI EN 61508
[3] ref. CEI EN 62061 + CEI EN 62061/EC2 [4] ref. UNI EN ISO 13849-1

| LP4ER/40-***M4 | 030 | 045 | 060 | 075 | 090 | 105 | 120 | 135 | 150 | 165 | 180 |
|---|---|---|---|---|---|---|---|---|---|---|---|
| height (mm) | 310 | 460 | 610 | 760 | 910 | 1,060 | 1,210 | 1,360 | 1,510 | 1,660 | 1,810 |
| number of beams | 10 | 15 | 20 | 25 | 30 | 35 | 40 | 45 | 50 | 55 | 60 |
| response time (ms) | 9,5 | 11 | 13 | 15 | 17 | 19 | 21 | 23 | 25 | 27 | 28,5 |
| Type [1] | 4 | | | | | | | | | | |
| SIL[2] | 3 | | | | | | | | | | |
| SILCL [3] | 3 | | | | | | | | | | |
| PL [4] | e | | | | | | | | | | |
| PFHd | 8.71E-09 | 9.45E-09 | 1.02E-08 | 1.10E-08 | 1.17E-08 | 1.25E-08 | 1.32E-08 | 1.40E-08 | 1.47E-08 | 1.55E-08 | 1.62E-08 |
| DCavg | 98.19% | 98.29% | 98.37% | 98.44% | 98.49% | 98.53% | 98.57% | 98.60% | 98.63% | 98.65% | 98.67% |
| MTTFd (years) | 100 | | | | | | | | | | |
| CFF | 80% | | | | | | | | | | |

| LP4ER/40-***M4L | 060 | 090 | 120 |
|---|---|---|---|
| height (mm) | 610 | 910 | 1,210 |
| number of beams | 20 | 30 | 40 |
| response time (ms) | 13 | 23 | 28.5 |
| Type [1] | 4 | | |
| SIL[2] | 3 | | |
| SILCL [3] | 3 | | |
| PL [4] | e | | |
| PFHd | 1.02E-08 | 1.17E-08 | 1.32E-08 |
| DCavg | 98.37% | 98.49% | 98.57% |
| MTTFd (years) | 100 | | |
| CFF | 80% | | |

| LP4ER/90-***M4 | 030 | 045 | 060 | 075 | 090 | 105 | 120 | 135 | 150 | 165 | 180 |
|---|---|---|---|---|---|---|---|---|---|---|---|
| height (mm) | 310 | 460 | 610 | 760 | 910 | 1,060 | 1,210 | 1,360 | 1,510 | 1,660 | 1,810 |
| number of beams | 5 | 7 | 9 | 11 | 13 | 15 | 17 | 19 | 21 | 23 | 25 |
| response time (ms) | 7 | 8 | 9 | 10 | 10.5 | 11 | 12 | 13 | 13.5 | 14 | 15 |
| Type (1) | 4 | | | | | | | | | | |
| SIL(2) | 3 | | | | | | | | | | |
| SILCL (3) | 3 | | | | | | | | | | |
| PL (4) | e | | | | | | | | | | |
| PFHd | 8.91E-09 | 9.48E-09 | 1.01E-08 | 1.06E-08 | 1.12E-08 | 1.18E-08 | 1.24E-08 | 1.29E-08 | 1.35E-08 | 1.41E-08 | 1.47E-08 |
| DCavg | 98.22% | 98.30% | 98.36% | 98.41% | 98.46% | 98.50% | 98.53% | 98.56% | 98.58% | 98.61% | 98.63% |
| MTTFd (years) | 100 | | | | | | | | | | |
| CFF | 80% | | | | | | | | | | |

| LP4ER/**-***M4 | 0A-050 | 0B-080 | 0C-090 |
|---|---|---|---|
| dist. between beams | 500 | 800 | 900 |
| number of beams | 2 | 3 | 4 |
| response time (ms) | 7 | 7 | 7 |
| Type (1) | 4 | | |
| SIL(2) | 3 | | |
| SILCL (3) | 3 | | |
| PL (4) | e | | |
| PFHd | 7.53E-09 | 7.70E-09 | 7.87E-09 |
| DCavg | 97.94% | 97.99% | 98.03% |
| MTTFd (years) | 100 | | |
| CFF | 80% | | |

| LP4ER/**-***M4L | 0A-050 | 0B-080 | 0C-090 |
|---|---|---|---|
| dist. between beams | 500 | 800 | 900 |
| number of beams | 2 | 3 | 4 |
| response time (ms) | 7 | 7 | 7 |
| Type (1) | 4 | | |
| SIL(2) | 3 | | |
| SILCL (3) | 3 | | |
| PL (4) | e | | |
| PFHd | 7.53E-09 | 7.70E-09 | 7.87E-09 |
| DCavg | 97.94% | 97.99% | 98.03% |
| MTTFd (years) | 100 | | |
| CFF | 80% | | |

# electrical diagrams of the connections

## LP4ER_M series

M12
(5 poles male unit)

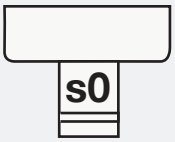


LP4ER/ **-***_

| pin | color | signal | type | description |
|---|---|---|---|---|
| 1 | BN | $24V_{CC}$ | POWER | power supply input |
| 2 | WH | range H/Test | IN | selection input |
| 3 | BU | 0V | POWER | supply voltage reference |
| 4 | BK | range H/Test | IN | selection input |
| 5 | GY | PE | GND | protection earth |

**possible combinations**

| pin 2 | pin 4 | function |
|---|---|---|
| LO | | test (no emission) |
| LO | HI | emission with high range |
| HI | LO | emission with low range |
| HI | | not admitted |
| levels: LO = <5 V or open; HI = 11 to 30 V | | |

| | | | |
|---|---|---|---|
| BK | black | OG | orange |
| BN | brown | GN | green |
| RD | red | BU | blue |
| YE | yellow | GY | grey |
| WH | white | VT | violet |
| PK | pink | | |

The Test contact is necessary only if the entire safety chain of the receiver downstream must be tested.
If the Test is not necessary replace the TEST contact with direct wiring at 24 $V_{DC}$.

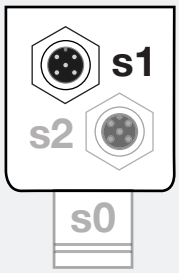

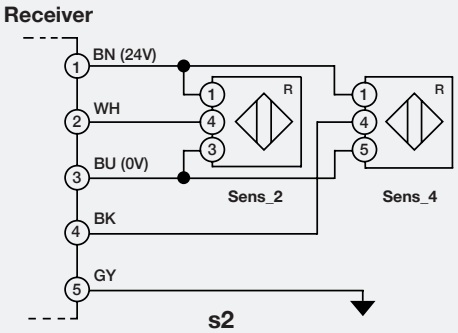


| pin | color | signal | type | function | levels |
|---|---|---|---|---|---|
| 1 | BN | 24 $V_{DC}$ | POWER | supply voltage output | max. total output current: 100 mA |
| 2 | WH | sens_1 | IN | muting 1 sensor input | LO: < 5 V or open; HI: 11 to 30 V |
| 3 | BU | 0 $V_{DC}$ | POWER | power supply reference | - |
| 4 | BK | sens_3 | IN | muting 3 sensor input | input selection |
| 5 | GY | PE | GND | earth protection | LO: < 5 V or open; HI: 11 to 30 V |
| LO: < 5 V or open; HI: 11 to 30 V | | | | | |

NOTE: The sensors can be of any type, the output level must be high when there is material (HI).

## LP4ER series

M23
(19 poles male RX unit)

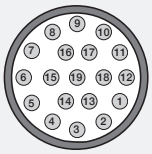


NOTE: The Muting Enabling signal (pin 15) must be LO before the HI enabling signal of the single sensors, and it must remain low for the entire duration of the sensor enabling signal, otherwise Muting will stop. The System Status output signal (pin 4) repeats the state of the OSSD outputs, HI= safety light curtain ON, LO= safety light curtain OFF; on models in which the signal level indication is present, the output status is momentarily denied with a pulse lasting 15 to 45ms and period 800ms if the signal is weak.

| | | | |
|---|---|---|---|
| **BK** | black | **OG** | orange |
| **BN** | brown | **GN** | green |
| **RD** | red | **BU** | blue |
| **YE** | yellow | **GY** | grey |
| **WH** | white | **VT** | violet |
| **PK** | pink | | |

| pin | color | signal | type | description |
|---|---|---|---|---|
| 1 | WH | Lamp. Muting | - | output for piloting the external Muting Lamp |
| 2 | RD | OSSD2 | OUT | second safety static output (PNP) |
| 3 | GY | OSSD1 | OUT | first safety static output (PNP) |
| 4 | YE | System Status + Sign. levlel | OUT | repetition of OSSDs status, see note + low signal level indication, see note |
| 5 | GN | N.C. | - a b | active with Muting, HI:Muting ON; LO:Muting OFF |
| 6 | BU | $0V_{CC}$ | POWER | supply voltage reference |
| 7 | VT | Mode_0 | - | input config. for the other models with Muting |
| 8 | GY - PK | Mode_1 | - | input config. for the other models with Muting |
| 9 | RD - BU | Mode_2 | - | input config. for the other models with Muting |
| 10 | WH - GN | Mode_3 | - | input config. for the other models with Muting |
| 11 | BK | Abilitaz. EDM | IN | enabling for external contactor control |
| 12 | WH - GN | PE | GND | earth protection connection |
| 13 | WH - YE | Man. / Autom. | IN | selection of the Start/Restart mode |
| 14 | BN - YE | start | IN | connection to the Start/Restart button |
| 15 | WH - GY | N.C. | - | not connected |
| 16 | BN - GY | override_1 | - | input 1 for the forced control of Muting |
| 17 | WH - PK | override_2 | - | input 2 for the forced control of Muting |
| 18 | BN - GN | EDM | IN | connection to the external control contacts |
| 19 | BN | $24V_{CC}$ | POWER | supply voltage input |

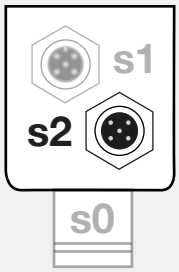

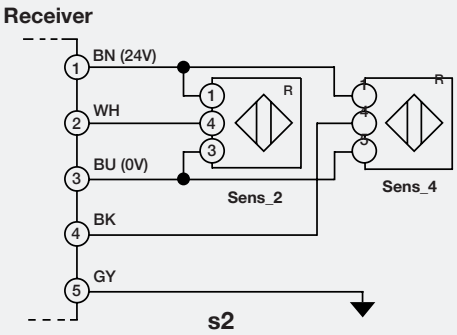


| pin | color | signal | type | function | levels |
|---|---|---|---|---|---|
| 1 | BN | 24 $V_{DC}$ | POWER | supply voltage output | max. total output current: 100 mA |
| 2 | WH | sens_2 | IN | muting 2 sensor input | LO: < 5 V or open; HI: 11 to 30 V |
| 3 | BU | 0 $V_{DC}$ | POWER | power supply reference | - |
| 4 | BK | sens_4 | IN | muting 4 sensor input | input selection |
| 5 | GY | PE | GND | earth protection | LO: < 5 V or open; HI: 11 to 30 V |
| | | | | LO: < 5 V or open; HI: 11 to 30 V | |

NOTE: The sensors can be of any type, the output level must be high when there is material (HI).

# dimensions (mm)

## LP4ER/**-***M4 - Receiver

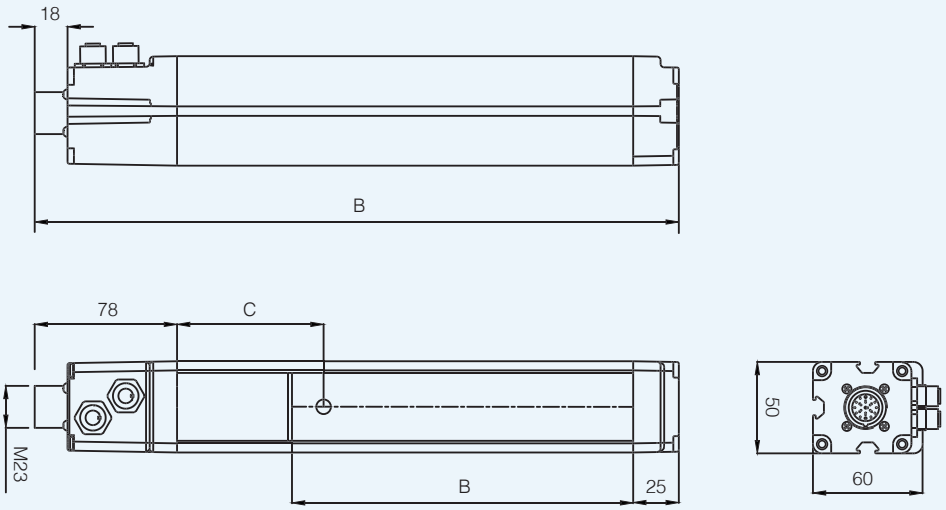


## LP4ER/**-***M4 - Emitter

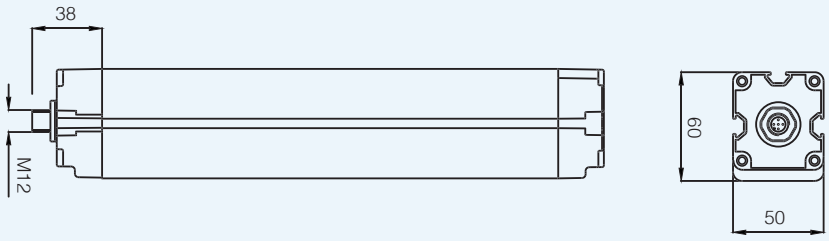


| dimensions | LP4ER/**-***M4 | | | | | | | | | | | | | | LP4ER/**-***M4L | | |
|---|---|---|---|---|---|---|---|---|---|---|---|---|---|---|---|---|---|
| | 030 | 045 | 060 | 075 | 090 | 105 | 120 | 135 | 150 | 165 | 180 | 0A | 0B | 0C | 0A | 0B | 0C |
| A (TX) | 436 | 586 | 736 | 886 | 1,036 | 1,186 | 1,336 | 1,486 | 1,636 | 1,786 | 1,936 | 736 | 1,036 | 1,136 | 736 | 1,036 | 1,136 |
| A (RX) | 476 | 626 | 776 | 926 | 1,076 | 1,226 | 1,376 | 1,526 | 1,676 | 1,826 | 1,976 | 776 | 1,076 | 1,176 | 776 | 1,076 | 1,176 |
| B (protected height) | 310 | 460 | 610 | 760 | 910 | 1,060 | 1,210 | 1,360 | 1,510 | 1,660 | 1,810 | 510* | 810* | 910* | 510* | 810* | 910* |
| C (first beam quote) | 72 | | | | | | | | | | | 120 | | | 76 | | |

# accessories

| ST203 / outfit mounting accessories | | | |
|---|---|---|---|
| product | to be used with | dimensions (mm) | description / installation |
| | LP4 series | 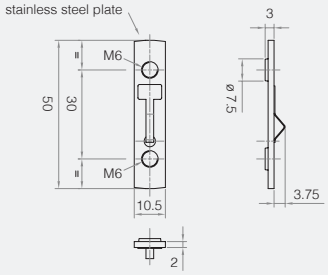  | **Fastening insert for 50x60 profile. Part of the standard kit**<br>Two pieces are provided for each bracket ST202. |

| ST202 / outfit mounting accessories | | | |
|---|---|---|---|
| product | to be used with | dimensions (mm) | description / installation |
| | LP4 series | 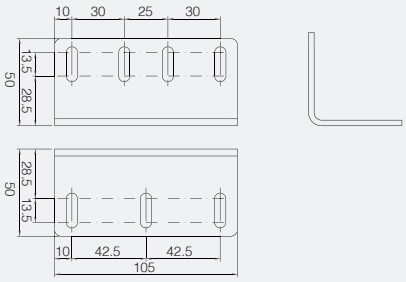  | **L Bracket**<br>Long bracket. Part of the standard kit. Two pieces are provided for each couples. Must be applied in the housin part of the body. |

## notes

# LP4PT series
## Light Curtains
Type 4

## features

- Type 4 according IEC 61496-1 and IEC 61496-2
- Robust housing (50x60 mm) for applications in presence of heavy shocks and vibrations
- Complete passive unit made by pre-mounted and pre-aligned integrated mirrors
- Protected height 500, 800 an 900 mm
- Resolutions 2, 3, 4 beams for body protection / access control
- Integrated functions: MANUAL/AUTOMATIC Restart and EDM
- Operating distance up to 6 m
- Muting and Override function selectable through dedicate wires
- M12 5 poles and M23 19 poles standard connectors

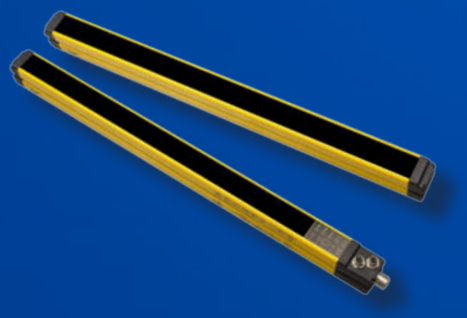

## download area

- Application notes
- Photos
- Catalogue / Manuals



## code description

LP4 PT / 0A - 050 M2

| | | |
|---|---|---|
| series | LP4 | Type 4 safety light curtains 50 x 60 mm compact housing |
| couple | PT | M12 connecored active element + passive element couple |
| beams | 0A | 2 beams resolution; body protection; 500 mm protected height |
| | 0B | 3 beams resolution; body protection; 800 mm protected height |
| | 0C | 4 beams resolution; body protection; 900 mm protected height |
| height | 050 | 500 mm protected height |
| | 080 | 800 mm protected height |
| | 090 | 900 mm protected height |
| muting | M2 | Integrated Muting function for 2 Muting sensors |
| | M4 | Integrated Muting function for 4 Muting sensors |

## available models

0...6 m controlled distance; 10 ms response time

| protected height (mm) | n° of beams | response time (mm) | model |
|---|---|---|---|
| 510 | 2 | 500 | LP4PT/0A-050M2 |
| | | | LP4PT/0A-050M4 |
| 810 | 3 | 800 | LP4PT/0B-080M2 |
| | | | LP4PT/0B-080M4 |
| 910 | 4 | 900 | LP4PT/0C-090M2 |
| | | | LP4PT/0C-090M4 |

## technical specifications

| | LP4PT | |
|---|---|---|
| operating voltage | 19.2...28.8 Vdc | PELV power supplier according to EN 60204-1 Cap.6.4 |
| power consumption, Receiver | 6 W | no load |
| power consumption, Emitter | 3 W | |
| output type | 2 x PNP | OSSD safety outputs |
| output current | 500 mA | higher values are considered overload |
| equivalent resistive load | 48 Ω | lower values are considered short circuit |
| capacitive load | 2 μF | lower values may be considered short circuit |
| recovery time | 15 s | |
| response time OSSDs | 30 ms | |
| effective aperture angle (EAA) | ≤ ± 2.5° | IEC 61496-1 |
| artificial light rejection | according to IEC 61496-2 | according to the reported standards |
| ambient light rejection | according to IEC 61496-2 | |
| IP mechanical protection | IP65 | without any additional precaution the device can't be used for outdoor applications |
| operating temperature | 0...+55°C | no condensation |
| storage temperature | -25...+70°C | to be respected also during transportation |
| humidity | 95% | no condensation |
| vibrations | according to IEC 61496-1 | according to the reported standards |
| shocks | according to IEC 61496-1 | |
| use of deflection mirrors | 0.85 | |
| ambient factors | 0.50 / 0.25 | |
| cable length (power supply/outputs) | 100 m | painted aluminium RAL 1012 |
| section body | 50 mm (front) x 60 mm | |
| S0 connector | 1x M23, 19p, male, nickel-plated brass | |
| S1 or S2 connector (or S1 only) | 2/1 M12 5p female | |

## safety parameters

| LP4PT/**-***M2 (M4) | 0A-050 | 0B-080 | 0C-090 |
|---|---|---|---|
| dist. between beams | 500 | 800 | 900 |
| number of beams | 2 | 3 | 4 |
| response time (ms) | | 10 | |
| Type [1] | | 4 | |
| SIL[2] | | 3 | |
| SILCL [3] | | 3 | |
| PL [4] | | e | |
| PFHd | 4.83E-09 | 4.92E-09 | 5.01E-09 |
| DCavg | 98.14% | 98.16% | 98.19% |
| MTTFd (years) | | 100 | |
| CFF | | 80% | |

[1] ref. CEI EN 61496-1; CEI EN 61496-2
[2] ref. CEI EN 61508
[3] ref. CEI EN 62061 + CEI EN 62061/EC2
[4] ref. UNI EN ISO 13849-1

# electrical diagrams of the connections

## LP4ER series

M23
(19 poles male RX unit)

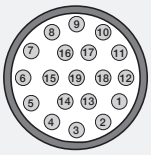


| pin | color | signal | type | description |
|---|---|---|---|---|
| 1 | WH | Lamp. Muting | - | output for piloting the external Muting Lamp |
| 2 | RD | OSSD2 | OUT | second safety static output (PNP) |
| 3 | GY | OSSD1 | OUT | first safety static output (PNP) |
| 4 | YE | System Status + Sign. levlel | OUT | repetition of OSSDs status, see note + low signal level indication, see note |
| 5 | GN | N.C. | OUT | active with Muting, HI: Muting ON; LO: Muting OFF |
| 6 | BU | 0 $V_{DC}$ | POWER | supply voltage reference |
| 7 | VT | Mode_0 | - | input config. for the other models with Muting |
| 8 | GY - PK | Mode_1 | - | input config. for the other models with Muting |
| 9 | RD - BU | Mode_2 | - | input config. for the other models with Muting |
| 10 | WH - GN | Mode_3 | - | input config. for the other models with Muting |
| 11 | BK | Abilitaz. EDM | IN | enabling for external contactor control |
| 12 | WH - GN | PE | GND | earth protection connection |
| 13 | WH - YE | Man. / Autom. | IN | selection of the Start / Restart mode |
| 14 | BN - YE | start | IN | connection to the Start / Restart button |
| 15 | WH - GY | N.C. | - | not connected |
| 16 | BN - GY | override_1 | - | input 1 for the forced control of Muting |
| 17 | WH - PK | override_2 | - | input 2 for the forced control of Muting |
| 18 | BN - GN | EDM | IN | connection to the external control contacts |
| 19 | BN | 24 $V_{DC}$ | POWER | supply voltage input |

NOTE: The Muting Enabling signal (pin 15) must be LO before the HI enabling signal of the single sensors, and it must remain low for the entire duration of the sensor enabling signal, otherwise Muting will stop. The System Status output signal (pin 4) repeats the state of the OSSD outputs, HI= safety light curtain ON, LO= safety light curtain OFF; on models in which the signal level indication is present, the output status is momentarily denied with a pulse lasting 15 to 45ms and period 800ms if the signal is weak

| | | | |
|---|---|---|---|
| **BK** | black | **OG** | orange |
| **BN** | brown | **GN** | green |
| **RD** | red | **BU** | blue |
| **YE** | yellow | **GY** | grey |
| **WH** | white | **VT** | violet |
| **PK** | pink | | |

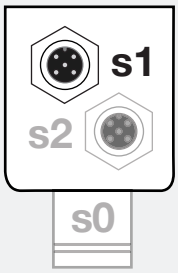

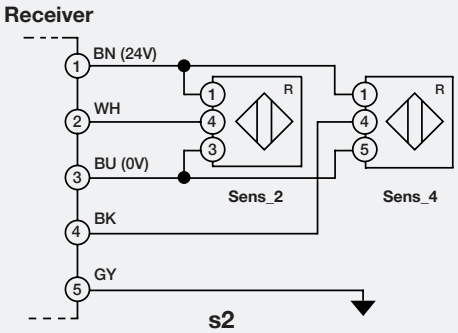


| pin | color | signal | type | function | levels |
|---|---|---|---|---|---|
| 1 | BN | 24 $V_{DC}$ | POWER | supply voltage output | max. total output current: 100 mA |
| 2 | WH | sens_1 | IN | muting 1 sensor input | LO: < 5 V or open; HI: 11 to 30 V |
| 3 | BU | 0 $V_{DC}$ | POWER | power supply reference | - |
| 4 | BK | sens_3 | IN | muting 3 sensor input | input selection |
| 5 | GY | PE | GND | earth protection | LO: < 5 V or open; HI: 11 to 30 V |
| | | | | LO: < 5 V or open; HI: 11 to 30 V | |

NOTE: The sensors can be of any type, the output level must be high when there is material (HI).

## electrical diagrams of the connections

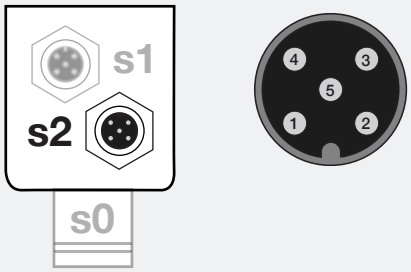





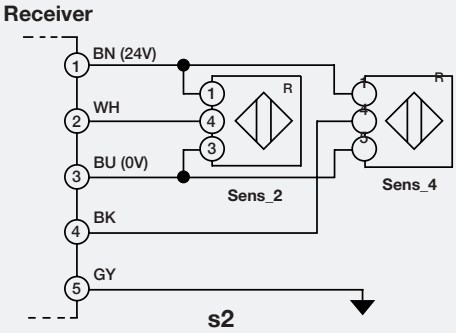


| pin | color | signal | type | function | levels |
|---|---|---|---|---|---|
| 1 | BN | 24 $V_{DC}$ | POWER | supply voltage output | max. total output current: 100 mA |
| 2 | WH | sens_2 | IN | muting 2 sensor input | LO: < 5 V or open; HI: 11...30 V |
| 3 | BU | 0 $V_{DC}$ | POWER | power supply reference | - |
| 4 | BK | sens_4 | IN | muting 4 sensor input | input selection |
| 5 | GY | PE | GND | earth protection | LO: < 5 V or open; HI: 11...30 V |
| | | | | LO: < 5 V or open; HI: 11...30 V | |

NOTE: the sensors can be of any type, the output level must be high when there is material (HI).

## dimensions (mm)

**LP4PT/0A-050M2(4)**

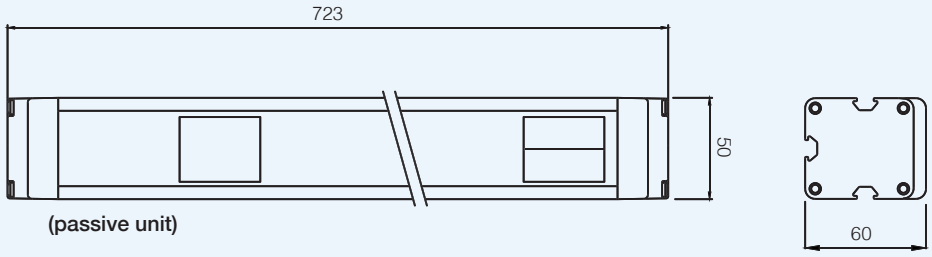


(passive unit)

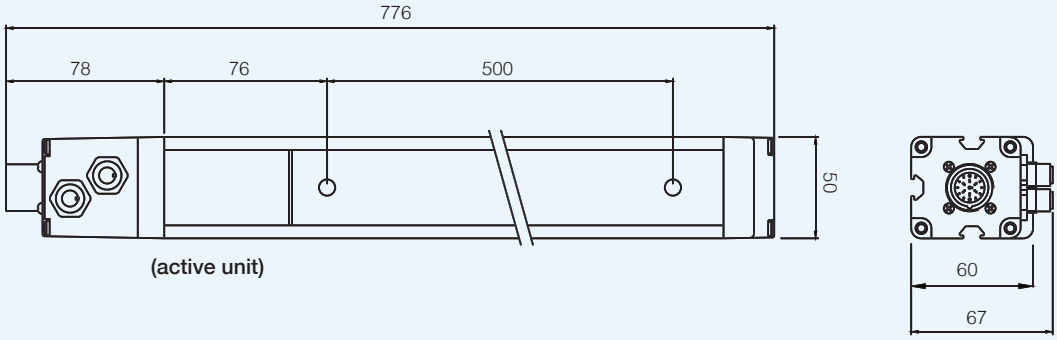


(active unit)

## LP4PT/0B-080M2(4)

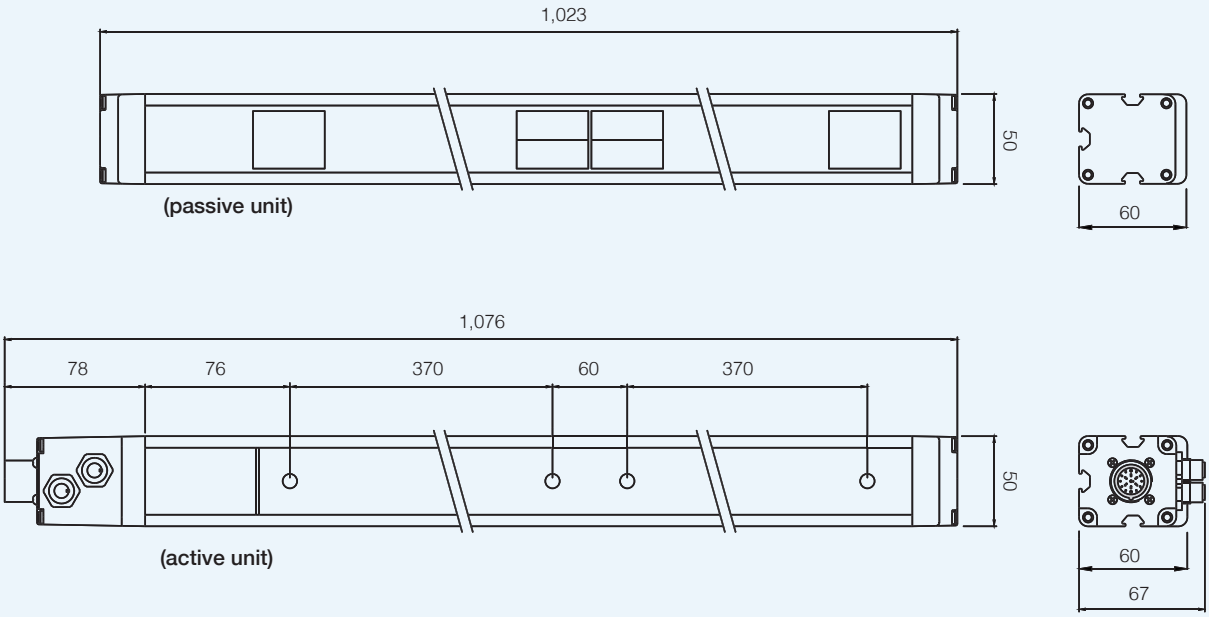


## LP4PT/0C-090M2(4)

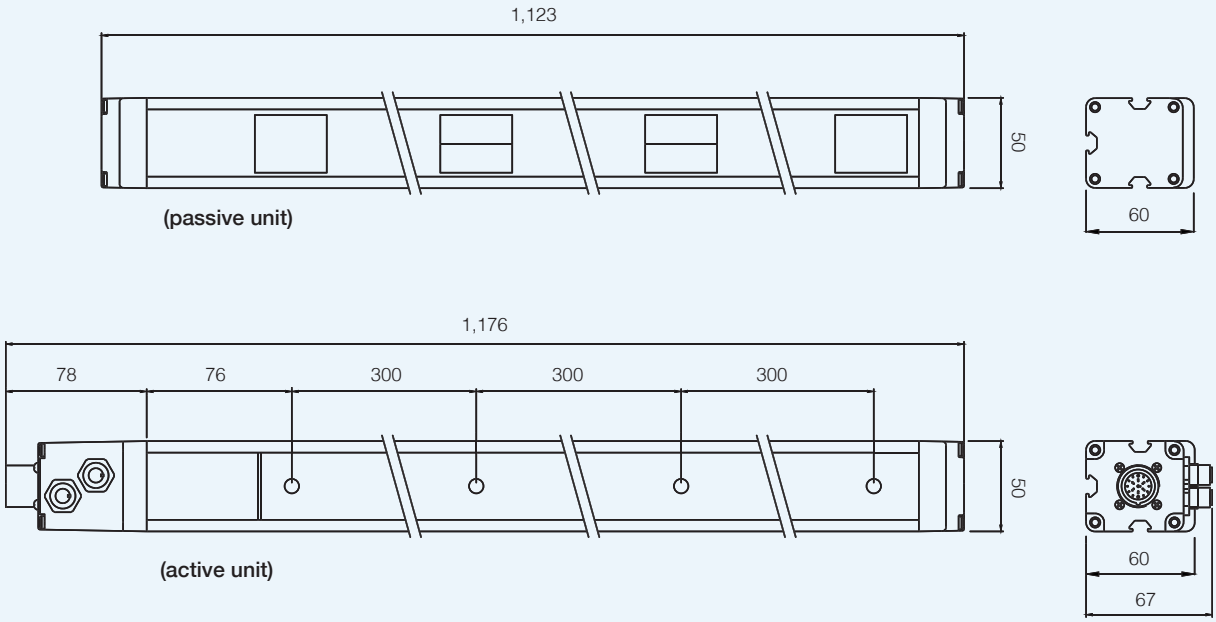

# accessories

## ST203 / outfit mounting accessories

| product | to be used with | dimensions (mm) | description / installation |
|---|---|---|---|
| | LP4 series | 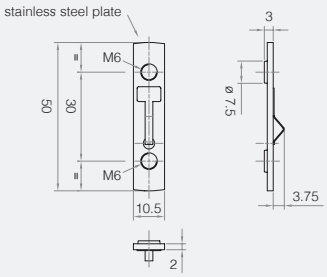  | **Fastening insert for 50 x 60 profile. Part of the standard kit**<br>Two pieces are provided for each bracket ST202. |

## ST202 / outfit mounting accessories

| product | to be used with | dimensions (mm) | description / installation |
|---|---|---|---|
| | LP4 series | 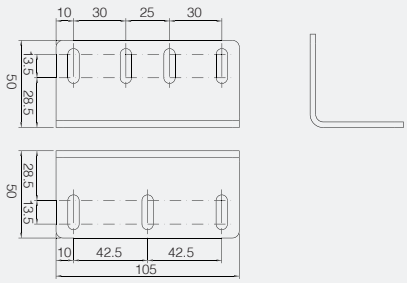  | **L Bracket**<br>Long bracket. Part of the standard kit. Two pieces are provided for each couples. Must be applied in the housin part of the body. |

## connectors

### CD12M/0E-***A1 / M12 8 poles axial female connector with PVC cable

| product | to be used with | dimensions (mm) | description / installation |
|---|---|---|---|
| | Safety light Curtains<br>• LS2 STANDARD (TX)<br>• LS4 STANDARD (TX)<br>• LP4ER/0*-***L12 (RX)<br>• LP4PF<br><br>Safety Sensors<br>• SH e TH<br>• SH-IC e TH-IC | 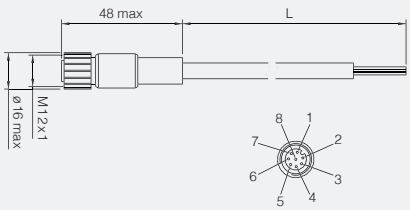 | M12 8 poles axial female connector with PVC cable. Cable length is represented by *** digits:<br>050 : 5 m<br>100 : 10 m<br>150 : 15 m<br>250 : 25 m<br>400 : 40 m |

### CD12M/0E-***C1 / M12 8 poles 90° female connector with PVC cable

| product | to be used with | dimensions (mm) | description / installation |
|---|---|---|---|
| | Safety light Curtains<br>• LS2 STANDARD (RX)<br>• LS4 STANDARD (RX)<br>• LP4ER/0*-***L12 (RX)<br>• LP4PF | 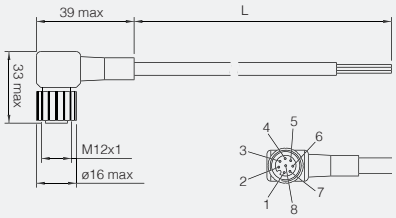 | M12 8 poles 90° female connector with PVC cable. Cable length is represented by *** digits:<br>050 : 5 m<br>100 : 10 m<br>150 : 15 m |

### CD12M/0H-***A3 / M12 5 poles axial female connector with PVC cable

| product | to be used with | dimensions (mm) | description / installation |
|---|---|---|---|
| | Safety light Curtains<br>• LS2 BASE (TX e RX)<br>• LS2 STANDARD (TX)<br>• LS4 BASE (TX e RX)<br>• LS4 STANDARD (TX)<br><br>Safety Sensors<br>• SH e TH<br>• SH-IC e TH-IC | 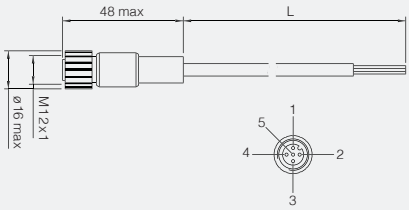 | M12 5 poles axial female connector with PVC cable. Cable length is represented by *** digits:<br>050 : 5 m<br>100 : 10 m<br>150 : 15 m<br>250 : 25 m<br>500 : 50 m |

### CD12M/0H-***C3 / M12 5 poles 90° female connector with PVC cable

| product | to be used with | dimensions (mm) | description / installation |
|---|---|---|---|
| 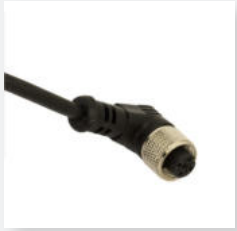 | Safety light Curtains<br>• LS2 BASE (TX e RX)<br>• LS2 STANDARD (TX)<br>• LS4 BASE (TX e RX)<br>• LS4 STANDARD (TX)<br><br>Safety Sensors<br>• SH e TH<br>• SH-IC e TH-IC | 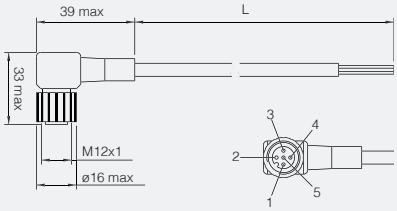 | M12 5 poles 90° female connector with PVC cable. Cable length is represented by *** digits:<br>050 : 5 m<br>100 : 10 m<br>150 : 15 m |

## CD12M/0H-050D1 / M12 5 poles axial female connector

| product | to be used with | dimensions (mm) | description / installation |
|---|---|---|---|
| | Safety light Curtains<br>• LP4ER_M<br>• LP4PT<br><br>To be used for Muting | 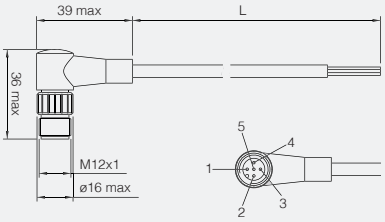 | M12 5 poles axial female connector |

## CDP12/0H-***AC / M12 5 poles axial female female plug

| product | to be used with | dimensions (mm) | description / installation |
|---|---|---|---|
| | Safety light Curtains<br>• LS2_M, LS2_S, LS2_F (MASTER-SLAVE)<br>• LS4_M, LS4_S, LS2_F (MASTER-SLAVE)<br>• LP4ER, LP4ER_M: connection TX alla LP/ BOX-1 | 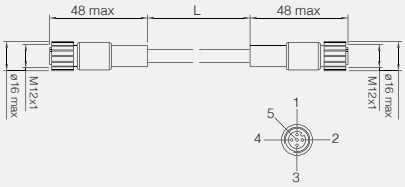 | M12 5 poles axial female female plug. Cable length is represented by *** digits:<br>003 : 0.3 m<br>030 : 3 m<br>050 : 5 m |

## CD23M/0R-***A1 / M23 19 poles axial connector with PVC cable

| product | to be used with | dimensions (mm) | description / installation |
|---|---|---|---|
| | Safety light Curtains<br>• LP4ER/40_L<br>• LP4ER_M (RX)<br>• LP4PT (Unità attiva) | 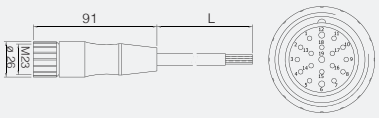 | M23 19 poles axial connector with PVC cable.<br><br>Cable length is represented by *** digits:<br>030 : 3 m<br>050 : 5 m<br>100 : 10 m<br>150 : 15 m<br>200 : 20 m<br>300 : 30 m |

## CD23M/0R-***A1LM / M23 19 poles axial connector with PVC cable and external Muting Lamp wire

| product | to be used with | dimensions (mm) | description / installation |
|---|---|---|---|
| | Safety light Curtains<br>• LP4ER_M;<br>• LP4_PT; | 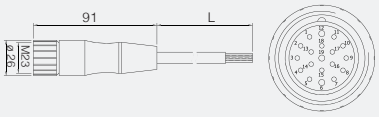 | M23 19 poles axial connector with PVC cable and external Muting Lamp wire.<br><br>Cable length is represented by *** digits:<br>200 : 20 m<br>300 : 30 m |

| CDP23/0R-***AC / M23 19 poles axial female female plug | | | |
|---|---|---|---|
| product | to be used with | dimensions (mm) | description / installation |
| | Safety light Curtains<br>• LP4ER/40_L<br>• LP4ER_M (RX)<br>• LP4PT (active unit)<br><br>To connect RX or Active Unit to LP/BOX-1 | 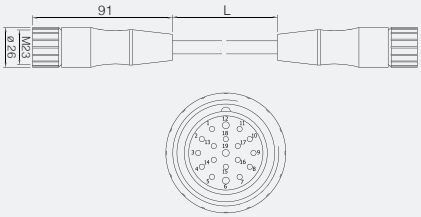 | M12 5 poles axial female female plug.<br>Cable length is represented by *** digits:<br>030 : 3 m<br>050 : 5 m<br>100 : 10 m |

## mounting brackets and anti-vibrating bumpers

| ST VP 4 / 4 pieces anti-vibrating bumpers kit | | | |
|---|---|---|---|
| product | to be used with | dimensions (mm) | description / installation |
| | Safety light Curtains<br>• LP4 | 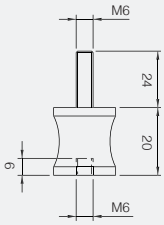 | 4 pieces anti-vibrating bumpers kit for LP4 Safety light Curtains |

| ST VP 6 / 6 pieces anti-vibrating bumpers kit | | | |
|---|---|---|---|
| product | to be used with | dimensions (mm) | description / installation |
| | Safety light Curtains<br>• LP4 | 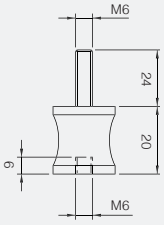 | 6 pieces anti-vibrating bumpers kit for LP4 Safety light Curtains |

| ST 4V S / 4 pieces anti-vibrating bumpers kit | | | |
|---|---|---|---|
| product | to be used with | dimensions (mm) | description / installation |
| | Safety light Curtains<br>• LS2<br>• LS4 | 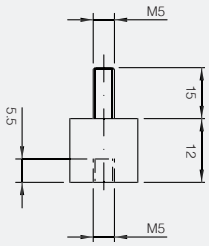 | 4 pieces anti-vibrating bumpers kit for LS4 Safety light Curtains 150 mm protected height models |

## ST 8V S / 8 pieces anti-vibrating bumpers kit

| product | to be used with | dimensions (mm) | description / installation |
|---|---|---|---|
| | Safety light Curtains<br>• LS2<br>• LS4 | 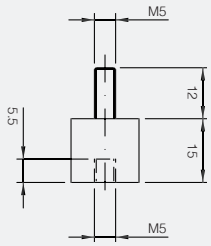 | 8 pieces anti-vibrating bumpers kit for LS4 Safety light Curtains 150...1,050 mm protected height models |

## ST 12V S / 12 pieces anti-vibrating bumpers kit for LS4 Safety light Curtains

| product | to be used with | dimensions (mm) | description / installation |
|---|---|---|---|
| | Safety light Curtains<br>• LS2<br>• LS4 | 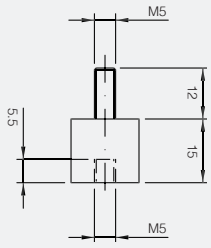 | 12 pieces anti-vibrating bumpers kit for LS4 Safety light Curtains 1,200...1,800 mm protected height models |

## ST 201 4 / 4 pieces L short mounting brackets kit

| product | to be used with | dimensions (mm) | description / installation |
|---|---|---|---|
| | Safety light Curtains<br>• LP4 | 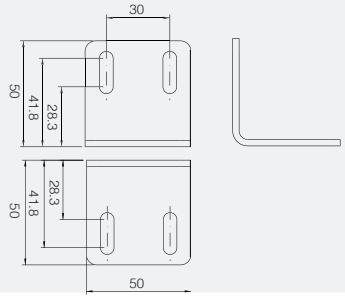 | 4 pieces L short mounting brackets kit for LP4 Safety light Curtains |

## ST 201 6 / 6 pieces L short mounting brackets kit

| product | to be used with | dimensions (mm) | description / installation |
|---|---|---|---|
| | Safety light Curtains<br>• LP4 | 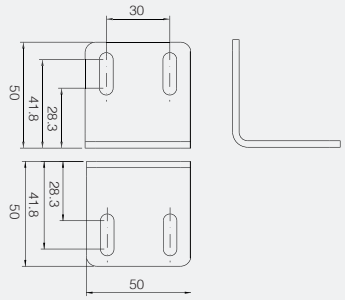 | 6 pieces L short mounting brackets kit for LP4 Safety light Curtains |

## ST 202 4 / 4 pieces L curved mounting brackets for passive element

| product | to be used with | dimensions (mm) | description / installation |
|---|---|---|---|
| | | 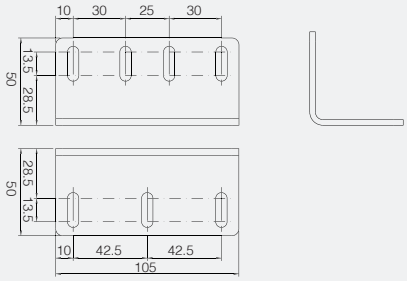  | 4 pieces L curved mounting brackets for passive element of LP4PF and LP4PT series |

## ST 203 4 / 4 pieces mounting nuts kit for LP4 Safety light Curtains

| product | to be used with | dimensions (mm) | description / installation |
|---|---|---|---|
| | Safety light Curtains<br>• LP4 | 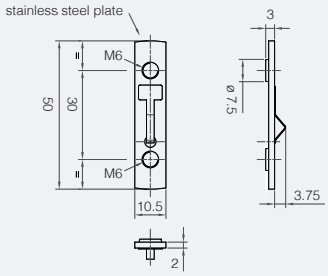  | 4 pieces mounting nuts kit for LP4 Safety light Curtains |

## ST 203 6 / 6 pieces mounting nuts kit for LP4 safety light curtains

| product | to be used with | dimensions (mm) | description / installation |
|---|---|---|---|
| | Safety light Curtains<br>• LP4 | 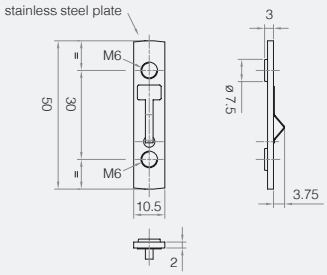  | 6 pieces mounting nuts kit for LP4 Safety light Curtains |

## ST 204 4S / 4 pieces mounting brackets kit

| product | to be used with | dimensions (mm) | description / installation |
|---|---|---|---|
| | Safety light Curtains<br>• LS2<br>• LS4 | 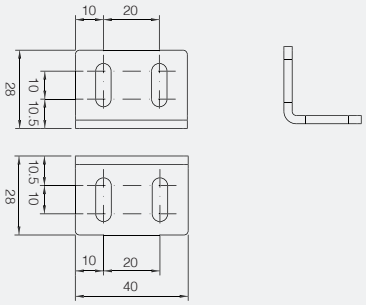  | 4 pieces mounting brackets kit for LS2/ LS4 Safety light Curtains |

## ST 204 6S / 6 pieces mounting brackets kit

| product | to be used with | dimensions (mm) | description / installation |
|---|---|---|---|
| | Safety light Curtains<br>• LS2<br>• LS4 | 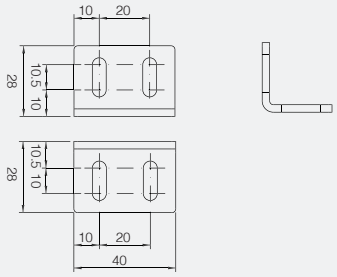 | 6 pieces mounting brackets kit for LS2/ LS4 Safety light Curtains |

## ST 206 4S / 4 pieces L curved mounting brackets kit

| product | to be used with | dimensions (mm) | description / installation |
|---|---|---|---|
| | Safety light Curtains<br>• LS2<br>• LS4 | 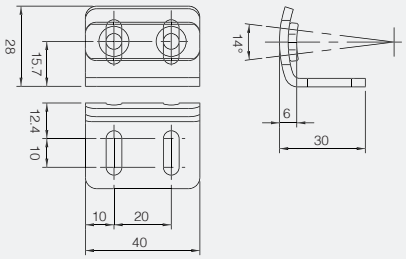 | 4 pieces L curved mounting brackets aad nuts kit for LS2/LS4 Safety light Curtains to ease mechanical installation |

## ST 206 6S / 6 pieces L curved mounting brackets kit

| product | to be used with | dimensions (mm) | description / installation |
|---|---|---|---|
| | Safety light Curtains<br>• LS2<br>• LS4 | 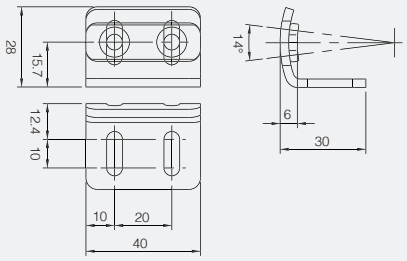 | 6 pieces L curved mounting brackets ad nuts kit for LS2/LS4 Safety light Curtains to ease mechanical installation |

## ST 207 S / 4 pieces rotating brackets kit

| product | to be used with | dimensions (mm) | description / installation |
|---|---|---|---|
| | Safety light Curtains<br>• LS2<br>• LS4 | 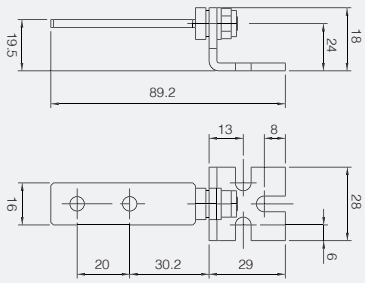 | 4 pieces rotating brackets and nuts kit for LS2/LS4 Safety light Curtains |

## test rod

| ST 2214 / 2220 / 2230 / 2240 / 2250 | | | |
|---|---|---|---|
| product | to be used with | dimensions (mm) | description / installation |
| | Safety light curtains<br>• LS4ER/14<br>• LS4ER/20<br>• LS2ER/30<br>• LS4ER/30<br>• LS2ER/40<br>• LS4ER/40<br>• LP4ER/40 | | 14 - 20 - 30 - 40 - 50 mm<br>resolution test rod |

| model | BLACK painted aluminum pipe | |
|---|---|---|
| | Dim. “A” (mm) | Dim. “A” (mm) |
| ST 2214 | ø 14 | 1 |
| ST 2220 | ø 20 | 1 |
| ST 2230 | ø 30 | 1 |
| ST 2240 | ø 40 | 1 |
| ST 2250 | ø 50 | 1,5 |

## protective columns for safety light curtains

| ST F FIX / standard column base | | | |
|---|---|---|---|
| product | to be used with | dimensions (mm) | description / installation |
| | Columns for Safety series<br>• ST CL***<br>• ST CLS*** | 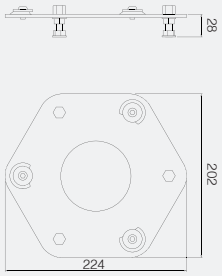 | Standard column base |

| ST FLEX / column base with load springs | | | |
|---|---|---|---|
| product | to be used with | dimensions (mm) | description / installation |
| | Safety light Curtains<br>• ST CL***<br>• ST CLS*** | 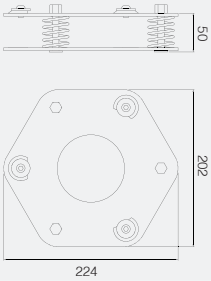 | Column base with load springs |

| product | to be used with | dimensions (mm) | description / installation |
|---|---|---|---|
| ST CL A | 2 beams LP4 Safety light Curtains | 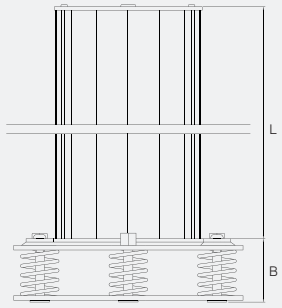  | Column for LP 2 beams light curtain |
| ST CL B | 3 beams LP4 Safety light Curtains | | Column for LP 3 beams light curtain |
| ST CL C | 4 beams LP4 Safety light Curtains | | Column for LP 4 beams light curtain |
| ST CL 17 | LP4 Safety light Curtains h ≤ 1,700 mm | | Column for h=1,700 mm LP light curtains |
| ST CL 20 | LP4 Safety light Curtains h ≤ 2,000 mm | | Column for h=2,000 mm LP light curtains |
| ST CL AP | Safety light Curtains LP4 2 beams | 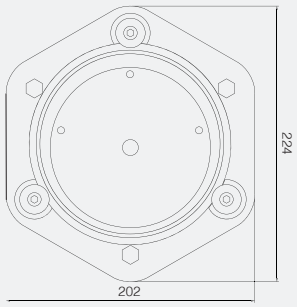  | Column for 2 beams LP light curtains, with PG11 connection |
| ST CL BP | Safety light Curtains LP4 3 beams | | Column for 3 beams LP light curtains, with PG11 connection |
| ST CL CP | Safety light Curtains LP4 4 beams | | Column for 4 beams LP light Curtains, with PG11 connection |
| ST CL 17P | Safety light Curtains LP4 h ≤ 1,700 mm | | Column for LP light curtains h =1,700 mm, with PG11 connection |
| ST CL 17P | Safety light Curtains LP4 h ≤ 1,700 mm | | Column for LP light Curtains h = 2,000 mm, with PG11 connection |

| models | ST CL A / ST CL AP | ST CL B / ST CL BP | ST CL C / ST CL CP | ST CL 17 / ST CL 17P | ST CL 20 / ST CL 20P |
|---|---|---|---|---|---|
| QUOTE 'L' [mm] | 1,000 | 1,200 | 1,330 | 1,700 | 1,970 |
| QUOTE B' [mm] | 55 | | | | |

| product | to be used with | dimensions (mm) | description / installation |
|---|---|---|---|
| ST AX | Safety light Curtains<br>• LS2<br>• LS4<br>• LP4 | 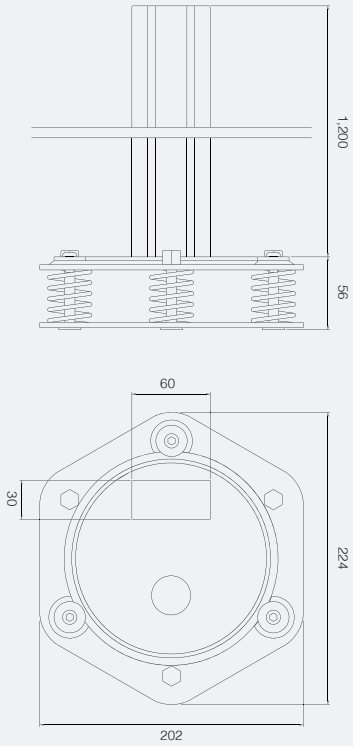  | "Simple" Column for LP and LS light curtains |

| product | to be used with | dimensions (mm) | description / installation |
|---|---|---|---|
| ST CLS B | Safety light Curtains<br>• LS2ER/0A<br>• LS4 ER/0A<br>• LS2ER/**-030(045)(060)<br>• LS4ER/**-030(045)(060) | | Column for LS 2 beams light Curtain |
| ST CLS C | Safety light Curtains<br>• LS2ER/0B(0C)<br>• LS4 ER/0B(0C)<br>• LS2ER/**-075 (090)(105)<br>• LS4ER/**-075 (090)(105) | | Column for LS 3 and 4 beams light Curtain |
| ST CLS 17 | Safety light Curtains<br>• LS2ER/**-120 (135)<br>• LS4ER/**-120 (135) | | Column for LS h = 1,700 mm |
| ST CLS 20 | Safety light Curtains<br>• LS2ER/**-150<br>• LS4ER/**-150 | | Column for LS h = 2,000 mm |
| ST CLS BP | Safety light Curtains<br>• LS2ER/0A<br>• LS4 ER/0A<br>• LS2ER/**- 030 (045)(060)<br>• LS4ER/**- 030 (045)(060) | | Column for LS 2 beams light Curtain, with PG11 connection |
| ST CLS CP | Safety light Curtains<br>• LS2ER/0B(0C)<br>• LS4 ER/0B(0C)<br>• LS2ER/**- 075 (090)(105)<br>• LS4ER/**- 075 (090)(105) | | Column for LS 3 and 4 beams light Curtain, with PG11 connection |
| ST CLS 17P | Safety light Curtains<br>• LS2ER/**- 120 (135)<br>• LS4ER/**- 120 (135) | | Column h=1,700 mm for LS light Curtain, with PG11 connection |
| ST CLS 20P | Safety light Curtains<br>• LS2ER/**- 150<br>• LS4ER/**- 150 | | Column h=2,000 mm for LS light Curtain, with PG11 connection |

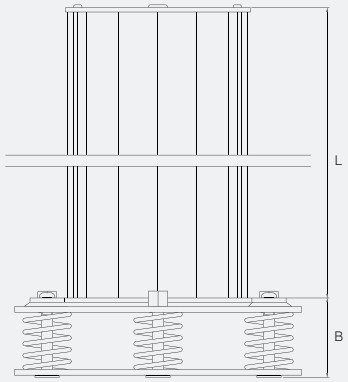


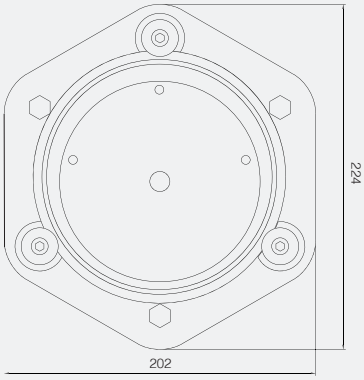


| model | ST CLS B<br>ST CLS BP | ST CLS C<br>ST CLS CP | ST CLS 17<br>ST CLS 17P | ST CLS 20<br>ST CLS 20P |
|---|---|---|---|---|
| QUOTE 'L' [mm] | 1,000 | 1,330 | 1,660 | 1,970 |
| QUOTE B' [mm] with ST FLEX base | 55 | | | |
| QUOTE B' [mm] with ST FIX base | 34 | | | |

# deviating mirrors or columns with integrated mirrors

| product | to be used with | dimensions (mm) | description / installation |
|---|---|---|---|
| SLA CL | Safety light Curtains<br>• LS2<br>• LS4<br>• LP4 | | Column with mirrors for 2 beams safety light curtain |
| SLB CL | | | Column with mirrors for 3 beams safety light curtain |
| SLC CL | | | Column with mirrors for 4 beams safety light curtain |
| SL 17 CL | | | Column with mirrors h = 1,700 mm |
| SL 20 CL | | | Column with mirrors h = 2,000 mm |

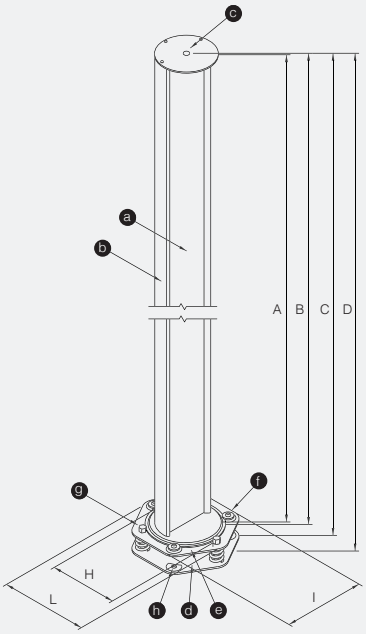


- A b profile height and corresponding a mirror height
- B Total SL X CL height (without ST FIX or ST FLEX base)
- C Total SL X CL height with ST FIX base
- D Total SL X CL height with ST FLEX base
- E Max ST FLEX height from floor (load springs height)
- F Max ST FIX height from floor (blocks height)
- G Upper plate thickness including level ball
- H SL X CL base diameter
- I ST FIX or ST FLEX amount of space
- L ST FIX or ST FLEX amount of space
- a Mirror
- b Column housing
- c
- d Lower fixing plate for ST FLEX base
- e Upper fixing plate for ST FLEX where to mount SL X CL column or ST FIX ground fixing plate
- f Column fixing screws and orientating reference rings
- g ST FLEX inclination adjusting nuts or ST FIX reference plane inclination adjusting double nuts
- h Floor fixing nuts place

| model | QUOTE A [1] | QUOTE B [2] | QUOTE C [3] | QUOTE D [4] | application |
|---|---|---|---|---|---|
| SL A CL | 1,000 | 1,016 | 1,036 | 1,066 | 2 beams perimetral protection |
| SL B CL | 1,200 | 1,216 | 1,246 | 1,256 | 3 beams perimetral protection |
| SL C CL | 1,330 | 1,346 | 1,366 | 1,386 | 4 beams perimetral protection |
| SL 17 CL | 1,700 | 1,716 | 1,736 | 1,756 | Perimetral protection with height up to 1,360 mm |
| SL 20 CL | 1,970 | 1,986 | 2,006 | 2,026 | Perimetral protection with height up to 1,660mm |

[1] Housing or mirror height [2] Total column height without base
[3] Total height with ST FIX base [4] Total height with ST FLEX base

| product | to be used with | dimensions (mm) | description / installation |
|---|---|---|---|
| SL 015 | Safety light Curtains<br>• LS2<br>• LS4<br>• LP4 | 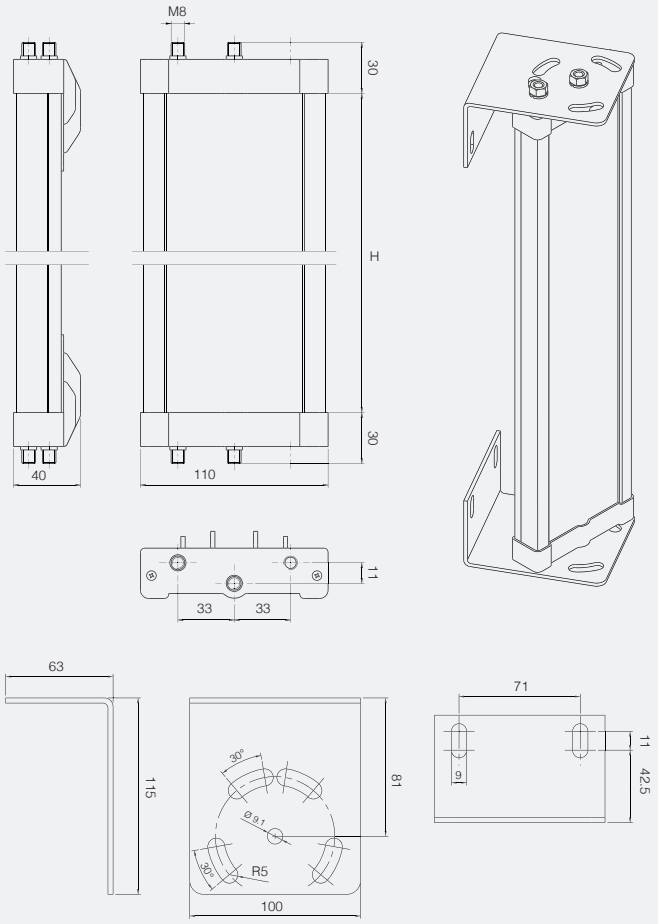 | Mirror for 160 mm protected height |
| SL 030 | | | Mirror for 310 mm protected height |
| SL 045 | | | Mirror for 460 mm protected height |
| SL 060 | | | Mirror for 610 mm protected height |
| SL 075 | | | Mirror for 760 mm protected height |
| SL 090 | | | Mirror for 910 mm protected height |
| SL 105 | | | Mirror for 1,060 mm protected height |
| SL 120 | | | Mirror for 1,210 mm protected height |
| SL 135 | | | Mirror for 1,360 mm protected height |
| SL 150 | | | Mirror for 1,510 mm protected height |
| SL 165 | | | Mirror for 1,660 mm protected height |
| SL 180 | | | Mirror for 1,810 mm protected height |



| model | mirror | Safety light Curtain | |
|---|---|---|---|
| | H | protected height | type |
| SL 015 | 250 | 160 | light Curtain |
| SL 030 | 400 | 310 | |
| SL 045 | 540 | 460 | |
| SL 060 | 715 | 610 | 2 beams |
| SL 075 | 885 | 760 | light Curtain |
| SL 090 | 1,060 | 910 | 3 beams |
| SL 105 | 1,230 | 1,060 | 4 beams |
| SL 120 | 1,400 | 1,210 | light Curtain |
| SL 135 | 1,450 | 1,360 | |
| SL 150 | 1,600 | 1,510 | |
| SL 165 | 1,750 | 1,660 | |
| SL 180 | 1,900 | 1,810 | |

## laser pointer

| STL 01 P | | | |
|---|---|---|---|
| product | to be used with | dimensions (mm) | description / installation |
| | Safety light Curtains<br>• LP4 | 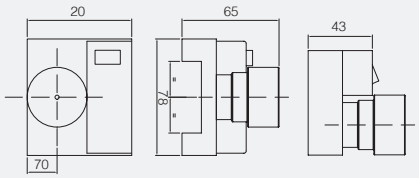 | Laser pointer for LP safety light Curtain |

| STL 01 S | | | |
|---|---|---|---|
| product | to be used with | dimensions (mm) | description / installation |
| | Safety light Curtains<br>• LS2<br>• LS4 | 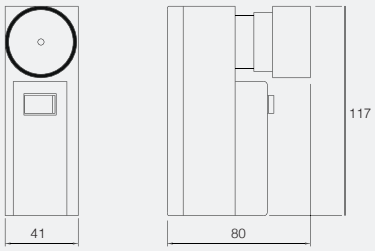 | Laser pointer for LS safety light Curtain |

## box d'interconnessione

| LP / BOX - 1 | | | |
|---|---|---|---|
| product | to be used with | dimensions (mm) | description / installation |
| | Safety light Curtains<br>• LP4ER_M<br>• LP4PT | 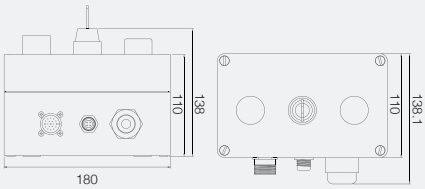 | Control box:<br>Start, Override, Muting Lamp, M12 and M23 connectors, 2 NO + 1 NC Relay |

## relay modules / safety modules

| SB 300 | | | |
|---|---|---|---|
| product | to be used with | dimensions (mm) | description / installation |
| | Safety light Curtains<br>• LS2<br>• LS4<br>• LP4 | 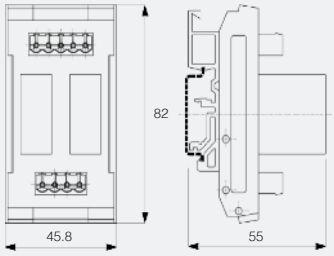 | Force guided relay module |

| SB 400 | | | |
|---|---|---|---|
| product | to be used with | dimensions (mm) | description / installation |
| | Safety light Curtains<br>• LS2<br>• LS4<br>• LP4 | 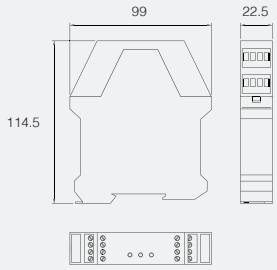 | Cat. 4 Safety Module |

| SB 400M | | | |
|---|---|---|---|
| product | to be used with | dimensions (mm) | description / installation |
| | Safety light Curtains<br>• LS2<br>• LS4 | 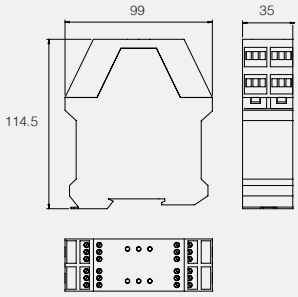 | Cat. 4 Safety Module with integrated Muting function |

## SBCR03 and SH-IA/IC TH-IA/IC accessories series

| STC 00 | | | |
|---|---|---|---|
| product | to be used with | dimensions (mm) | description / installation |
| | RL110,116,113G reflectors | 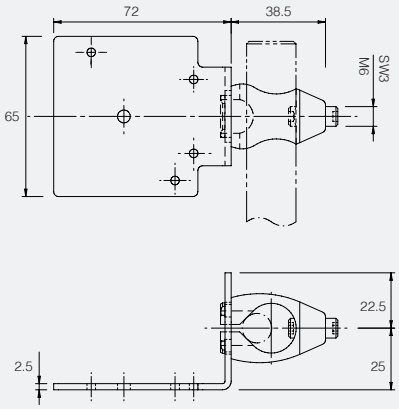 | RL110,116,113G bracket for cylindrical rod |

| STC 18 | | | |
|---|---|---|---|
| product | to be used with | dimensions (mm) | description / installation |
| | SH-IA/IC, TH-IA/IC safety photocells | 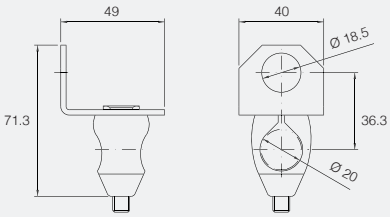 | SH-IA/IC, TH-IA/IC bracket for cylindrical rod |